# KB11-A
# central processor unit
# engineering drawings

digital equipment corporation · maynard. massachusetts

digital EQUIPMENT CORPORATION
MAYNARD, MASSACHUSETTS

# DRAWING DIRECTORY

## CUSTOMER PRINT SET INDEX

THIS IS PRINT SET

| SEQUENCE | | SEQUENCE |
|---|---|---|
| DRAWING DIRECTORY | B-DD-KB11-Ø | (SHEET ONE ONLY) |
| MODULE UTILIZATION | E-MU-KB11-A-1 | |
| BLOCK DIAGRAM | D-BD-KB11-A-Ø2 | |
| KB11-A FLOW DIAGRAMS | D-FD-KB11-A-Ø3 | |
| DATA PATHS (DAP) | E-CS-M81ØØ-Ø-1 | |
| GENERAL REGS & ALU CNTL(GRA) | E-CS-M81Ø1-Ø-1 | |
| IR DECODE & COND CODES(IRC) | E-CS-M81Ø2-Ø-1 | |
| PROC DATA & UNIBUS REG(PDR) | E-CS-M81Ø4-Ø-1 | |
| ROM & ROM CONTROL(RAC) | E-CS-M81Ø3-Ø-1 | |
| SYSTEM JUMPER BOARD(SJB) | E-CS-M8116-Ø-1 | |
| TIMING GENERATOR(TIG) | E-CS-M81Ø9-Ø-1 | |
| TRAP & MISC CNTL(TMC) | E-CS-M81Ø5-Ø-1 | |
| UNIBUS & CONSOLE CNTL (UBC) | E-CS-M81Ø6-Ø-1 | |
| BUS CABLES & GRANT CHAIN | D-IC-KB11-A-BG | |
| CIRCUIT SCHEMATIC | C-CS-M93Ø-Ø-1 | |
| CIRCUIT SCHEMATIC | C-CS-M92Ø-Ø-1 | |
| CIRCUIT SCHEMATIC | E-CS-5409910-0-1 | |
| CIRCUIT SCHEMATIC | E-CS-5409912-0-1 | |
| **CIRCUIT SCHEMATIC(TIG)** | **E-CS-M81Ø9-0-1** | |
| **SPECIAL REVISION** | | |

### UNIT VARIATIONS

| VARIATION | TITLE | PRINT SET TYPE: KB11-1 |
|---|---|---|
| KB11-A | 16 BIT PROCESSOR | X |

| REVISIONS | DATE | CHG. NO. | REV |
|---|---|---|---|
| | 5/72 | 7009871-00002 | A |
| | 7/73 | 7008871-00003 | B |
| | | KB11A-6 | C |
| | | KB11A-7 | D |
| | | KB11A-8 | E |
| | DW | KB11A-9 | F |
| | | KB11A-11 | H |
| | | KB11A-12A | J |
| | 7/73 | KB11A-13 | K |
| | 7/73 | KB11A-14 | L |
| | 3/73 | KB11A-15 | M |
| | 5/73 | KB11A-16 | N |
| | 5/73 | KB11A-17 | P |
| | 8/73 | KB11A-18 | R |
| | 12/73 | KB11A-19 | S |

| USED ON OPTION/MODEL | |
|---|---|
| 11/45 | |

| | | |
|---|---|---|
| DRN. R. COOK | DATE 3/30/72 | TITLE: 16 BIT PROCESSOR |
| CHK'D. R. COOK | DATE 3/30/72 | |
| PROJ ENG. | DATE 4/29/72 | |
| PROD. | DATE 5-1-72 | SIZE: B; CODE: DD; NUMBER: KB11-Ø; REV: S |
| FIELD SERV. | DATE 5/1/72 | |
| SHEET 1 OF 1 | | DIST |

DRB 106

DEC 16-(325)-1062-1--N871

This drawing and specifications, as herein, are the property of Digital Equipment Corporation and shall not be reproduced or copied in whole or in part or be used for the manufacture or sale of items without written permission.

| 1 | 2 | 3 | 4 | 5 | 6 | 7 | 8 | 9 | 10 | 11 | 12 | 13 | 14 | 15 | 16 | 17 | 18 | 19 | 20 | 21 | 22 | 23 | 24 | 25 | 26 | 27 | 28 |
|---|---|---|---|---|---|---|---|---|---|---|---|---|---|---|---|---|---|---|---|---|---|---|---|---|---|---|---|
| M930 | M8114 | M8115 | M8112 | M8113 | M8100 | M8101 | M8102 | M8103 | M8104 | M8105 | M8106 | | M8116 | | M8118 | | | | | M8118 | | | | | | | |
| | FRA | FRL | FRM | FXP | DAP | GRA | IRC | RRC | PDR | TMC | UBC | | SUB | | MEM CNTRL | | | | | MEM CNTRL | | | | | | | |
| | | | | | | | | | | | | NOTE 5 * | NOTE 5 * | | | | G401 G401 YA M8111 M8111 YA | | | | | G401 G401 YA M8111 M8111 YA | | | | NOTE 3 | |
| | | | | | | | | | | | | | | M8109 TIG | | | | | | | | | | | | | |
| SPACE RESERVED FOR KWII L OPTION | * | * | * | * | SPACE RESERVED FOR FPU OPTION (SLOTS 2 THRU 5) | | | | | | | | | | * | * | * | * | * | * | * | * | * | * | * | * | * | * |
| | | | | | | | | | | | | | | | SPACE RESERVED FOR SEMI CONDUCTOR MEMORY OPTIONS (SLOTS 16 THRU 25) | | | | | | | | | | | | |
| SPACE RESERVED FOR FPP MAINT CARD | | | | | | | | | | | | | | | | | | | | | | | | | SPACE RESERVED FOR SMALL PERIPHERAL CONTROLLERS | | |
| SPACE RESERVED FOR CP MAINT CARD | | | | | | | | | | | | | | | | | | | | | | | | | | | |

* DESIGNATES OPTION

NOTES:

1. POWER TO MOS AND BIPOLAR MEMORY REMAINS ON WITH THE CONSOLE ON/OFF SWITCH IN THE OFF POSITION. THIS IS INDICATED BY THE LED ON THE MOS CONTROL BOARD. ~~IF THERE IS NO MEMORY MANAGEMENT (M8107) INSTALLED, THE SYSTEM JUMPER BOARD (M8116) MUST BE INSTALLED IN SLOT #4.~~
2. CAUTION MUST BE OBSERVED WHEN INSTALLING THE BOARDS INTO THE BACKPANEL SLOTS BECAUSE OF NON-STANDARD VOLTAGES PRESENT IN SLOTS Ø1, Ø2 AND 15 THRU 28.
3. IF ONLY ONE UNIBUS IS USED:
   A. THE UNIBUS PLUGS IN SLOT #26
   B. PLUG AN INTERNAL BUS CONNECTOR JUMPER (M920Ø) INTO SLOTS #26 AND #27.
   C. PLUG A BUS TERMINATOR (M93Ø) INTO SLOT #1.

   IF TWO UNIBUSES ARE USED:
   A. UNIBUS A PLUGS IN SLOT #26
   B. TERMINATOR (M93Ø) FOR UNIBUS A PLUGS INTO SLOT #1.
   C. UNIBUS B PLUGS IN SLOT #27.
   D. TERMINATOR (M93Ø) FOR UNIBUS B PLUGS INTO SLOT #28.
4. MODULES IN SLOTS 17-20 MUST BE SAME TYPE; MODULES IN SLOTS 22-25 MUST BE SAME TYPE.
5. IF KTII OPTION IS PRESENT M8108 GOES IN SLOT 13 & M8107 GOES IN SLOT 14, IF NO KTII M8116 GOES IN SLOT 14 & SLOT 13 IS EMPTY.

| QTY | DESCRIPTION | PART NO | ITEM NO |
|---|---|---|---|
| * | SYSTEM MAINT TOOLS | 8-DD-SPMS-KA | |
| * | FLOATING POINT PROC. | 8-DD-FPII-B | |
| * | 64 WORD BOOTSTRAP | 8-DD-MRII-D | |
| * | INTERVAL CLOCK | A-ML-KWII-D | |
| * | BIPOLAR MEMORY | 8-DD-MSIK | |
| * | MOS MEMORY | 8-DD-MSIK-B | |
| * | MEM. MANAGEMENT UNIT | 8-DD-KTII-C | |
| 1 | INT. BUS CONN ASSY | M9200 | |
| 2 | BUS TERMINATOR | M930 | |
| 1 | SYSTEM JUMPER BD | M8116 | |
| 1 | TIMING GENERATOR | M8109 | |
| 1 | UNIBUS & CONSOLE CNTL | M8106 | |
| 1 | TRAP & MISC. CONTROL | M8105 | |
| 1 | PROC. DATA & UNIBUS REG | M8104 | |
| 1 | ROM & ROM CONTROL | M8103 | |
| 1 | IR DECOD & COND. CODES | M8102 | |
| 1 | GENERAL REGS & ALU CNTL | M8101 | |
| 1 | DATA PATHS | M9100 | |

PARTS LIST

USED ON OPTION/MODEL: 11/45

UNLESS OTHERWISE SPECIFIED: DIMENSIONS IN INCHES, TOLERANCES: FRACTIONS ±, DECIMALS .XX ±, .XXX ±, ANGLES ±30' 30"; MATERIAL; FINISH; BREAK SHARP TO REMOVE SURFACE QUALITY ✓; NEXT HIGHER ASSY

DRN [illegible] DATE 4-5-72; CHK [illegible] DATE 4/5/72; ENGR [illegible] DATE 4/5/72; PROJ ENGR [illegible] DATE 4/5/72; PROC DATE

DIGITAL EQUIPMENT CORPORATION, MAYNARD, MASS.

TITLE: MODULE UTILIZATION

SIZE E; CODE [illegible]; NUMBER MUKB11-A-Ø1; REV A; SCALE NONE; WT; SHEET 1 OF 1

E MUKB11-A-Ø1 A

SEE TOMB NO. DMC 100

This drawing and specifications, herein, are the property of Digital Equipment Corporation and shall not be reproduced or copied or used in whole or in part as the basis for the manufacture or sale of items without written permission

CCL (T2) [54-52]

0 NO CHANGE
1 INSTRUCTION DEPENDENT
2 SET/CLR FROM IR (CCOP)
3 LOAD FROM FPP IF ENABLED
4 CCLD4
5 CCLD5
6 CCLD6
7 CCLD7

FEN [14-12]

FEN 14 ENABLE FORK C
FEN 13 ENABLE FORK B
FEN 12 ENABLE FORK A

ADR [07-00]

TO ADDRESS GATING

MSC (T1) [29-27]

0 NO AFFECT
1 ENA FP ATTN
2 NOT USED
3 SET CONF IF KERNEL MODE
4 SPL (SET PRIORITY LEVEL)
5 CONDITIONAL BUST
6 BRQ STROBE
7 BUST (BUS START)

BSD (T1) [40-39]

0 NO PAUSE
1 INTR PAUSE
2 BUS PAUSE
3 BUS LONG PAUSE

BSC (T1) [26-24]

0 DATI
1 SRC1 DATI
2 KERNEL DATI
3 SRC2 DATI
4 FC (CONTROLLED BY FPP)
5 DATO
6 BSOP1
7 BSOP2

BCT (T1) [32-30]

0 NO AFFECT
1 READ FPP DATA
2 CONSOLE ACKNOWLEDGE
3 CLEAR FLAGS
4 INIT IF KERNEL MODE
5 STACK REFERENCE
6 ACKNOWLEDGE
7 BEND (BUS END)

| BEF [11-8] | UADR5 [+40] | UADR4 [+20] |
|---|---|---|
| 0 | — | — |
| 1 | DESTINATION MODE 3,5,7 | SR≠1 |
| 2 | CONDITION CODE Z | -(PWRF+INTR) |
| 3 | SC ≠ 0 | SC<0 |
| 4 | -DIV SUB | CONDITION CODE N |
| 5 | -OBD (ODD BYTE DESTINATION)† | -DIV QUIT |
| 6 | BR14(0) | PS RESTORE |
| 7 | — | -[BRQ*-(T+CONF)] |
| 10 | RIP+FP SYNC | -(FP REQ * FP SYNC) |
| 11 | SC≠0 | DRQ(1) |
| 12 | CONF (CONSOLE FLAG) | -BRQ |
| 13 | PF(0)*(SF+TF) | PF(0)*(SF+ -TF) |
| 14 | — ‡ | — † |
| 15 | -FJ/CLASS ‡ | -O/CLASS |
| 16 | DRQ(1) | SR15(1) |
| 17 | RIP+FP SYNC | FP SYNC*FP REG WR |

†(BEF=5)*OBD=CONDITIONAL FORK B
(BEF=14)=CONSOLE BRANCHES
(BEF=14)=CONDITIONAL FORK C
(BEF=15)*-FJ/CLASS=CONDITIONAL FORK B

TO CONDITION CODES
FROM DATA PATHS
CONDITION CODE GENERATOR (GRAB, IRCE, F
FROM IR
IR DECODE (IRCB, C, D)
FROM AFIR
AFIR DECODE (RACE, F, H)
SUBSIDIARY ROM CONTROL (IRCH)
CONDITION CODE SUBSIDIARY ROM (IRCH)
ALU SUBSIDIARY ROM (GRAA)
FORK C (IRCC)
FORK B (IRCB)
FORK A (RACE, F, H)
BRANCH (RACK)
ADDRESS GATING (RACL)
ADR
FEN
BEF
RAR (RACD)
RARB (RACA, RACC)
RARA (RACC, RACD)
TO SEG
ZAP 200
ROM
RBR
ROM <63:60> (RACA)
ROM <59:56> (RACA)
ROM <55:52> (RACA)
ROM <51:48> (RACA)
ROM <47:44> (RACB)
ROM <43:40> (RACB)
ROM <39:36> (RACB)
ROM <35:32> (RACB)
ROM <31:28> (RACC)
ROM <27:24> (RACC)
ROM <23:20> (RACC)
ROM <19:16> (RACC)
ROM <15:12> (RACD)
ROM <11:08> (RACD)
ROM <07:04> (RACD)
ROM <03:00> (RACD)
(RACA, RACB, RACC)
T2 CLK
T1↓ CLK
T1 CLK
CCL
PWE
PAD
BSD
BCT
MSC
BSC
ALU
GENERAL REGISTER CONTROL (GRAC)
TO GENERAL REGISTERS
ALU CTRL (GRAA)
TO ALU
FROM CONSOLE
UNIBUS AND CONSOLE CONTROL (UBC)
TO/FROM UNIBUS CONTROL SIGNALS
TRAPS AND MISCELLANEOUS CONTROL (PRIORITY ARBITRATOR) (TMC)
TO/FROM FPP, KT11-C FASTBUS & UNIBUS (BR, BG)
TIMING GENERATOR (TIG)
TO ALL MODULES
FROM KT11-C FASTBUS & UNIBUS

| REV | REVISIONS | CHANGE NO | CHK |
|---|---|---|---|

BRUNING 40-522 15M0
DEC FORM NO DRD 102-B

| FIRST USED ON OPTION/MODEL | QTY. | DESCRIPTION | PART NO. | ITEM NO. |
|---|---|---|---|---|
| 11/45 | | PARTS LIST | | |

UNLESS OTHERWISE SPECIFIED DIMENSION IN INCHES TOLERANCES
DECIMALS: XXX - .005, XX - .02, X - 1
ANGLES: ±0° 30'
REMOVE BURRS AND BREAK SHARP CORNERS. SURFACE QUALITY
MATERIAL
FINISH

DBN: DATE 4/6/72
CHK'D: DATE 4/14/72
ENG: DATE 11/11/72
PROJ. ENG.: DATE
PROD.: DATE
NEXT HIGHER ASSY.: KT11-F

digital EQUIPMENT CORPORATION MAYNARD MASSACHUSETTS

TITLE: BLOCK DIAGRAM

SIZE D | CODE DEC | NUMBER KB11-A-02 | REV
SCALE
SHEET 2 OF 2 | DIST

BASIC CODING NUMBER D BDKB11-A-02 REV

This drawing and specifications, herein, are the property of Digital Equipment Corporation and shall not be reproduced or copied or used in whole or in part as the basis for the manufacture or sale of items without written permission.

ALU

PCA (DAPF,H)

PCA(T2)[51]
0 NO CLOCK
1 LOAD

PCB (DAPF,H)

PCB(T2)[50-49]
0 NO CLOCK 2 SF7:LOAD
1 LOAD 3 DF7:LOAD

PCB

ALU

SHFR (DAPF,H,J)

SHF (T2) [48-47]
0 SWAP BYTES
1 PCB
2 NO SHIFT
3 RIGHT SHIFT

ALU (DAPF, DAPH)

B A

ALU(T1)[17-15]
0 NOT A
1 B
2 A
3 A PLUS B
4 NOT USED
5 A PLUS A
6 A MINUS B
7 INSTRUCTION DEPENDENT

BMX (T1) [21-20]
0 KOMX
1 K1MX
2 SR
3 BR

BMX (DAPB,C,D)

AMX (DAPB,C,D)

AMX(T1)[23-22]
0 DR
1 PCB
2 SR
3 BR

KOMX BR SR BR PCB SR DR

GS (16 REGISTERS) (GRAD,E,F,H)

GD (16 REGISTERS) (GRAD,E,F,H)

PAD (T14) [43-41]

| GS | GD | | GS | GD |
|---|---|---|---|---|
| 0 SF | SF | 4 | SFV1 | SFV1 |
| 1 SF | DF | 5 | DF | DF |
| 2 5 | 5 | 6 | 0 | 0 |
| 3 NOT USED | | 7 | 6 | 6 |

PWE (T14) [45-44]
0 DON'T WRITE
1 CONDITIONAL WRITE
2 WRITE
3 NOT USED

SRX (T2) [61-60]
0 SHFR
1 GS
2 SF7:SHFR, -SF7:GS
3 NOT USED

SRK (T2) [57]
0 NO CLOCK
1 LOAD

G S

SHFR

G D

DRX (T2) [59-58]
0 SHFR
1 GD
2 DF7:SHFR; -DF7:GD
3 CLR DR

SRMX (GRAD,E,FH)

DRMX (GRAD,E,FH)

DRK (T2) [56-55]
0 NO CLOCK
1 SHIFT RIGHT
2 SHIFT LEFT
3 LOAD

SC (GRAJ)

SHC (T1) [34-33]
0 NO COUNT
1 COUNT
2 LOAD DR<5:0>
3 LOAD $17_8$

DR

SR (GRAD,F,H)

DR (GRAD,E,FH)

DR

SR

PCB

BAX (T1) [38-37]
0 DR
1 PCB
2 SR
3 FP EALU (MAINT)

B A M X (DAPB, C,D)

VIRTUAL ADDRESS

FROM FPP EALU

KMX (T1) [19-18]
KOMX
0 1
1 2
2 SOURCE CONST.
3 DEST. CONST.

K1MX
START VECTOR
TRAP VECTOR
SOB & MARK OFFSET
BXX OFFSET

1 2 SRCCON DSTCON

KOMX (DAPD)

K1MX (DAPE)

TV SV BR BR

DATA FROM SEMI-COND MEMORY

TO/FROM UNIBUS

INT BUS

UNIBUS

BRMX (PDRA)

BRX (T2) [62]
0 SHFR
1 BUS(UNIBUS, FAST BUS, OR INTERNAL BUS)

SHFR

FROM FPP UADR/ CPU UADR

DISPLAY MULTIPLEXER (PDRF)

TO CONSOLE DATA LIGHTS

LR

BR

BRK (T2) [63]
0 NO CLOCK
1 LOAD

BR (DAPA)

BRA (PDRB)

IR (IRCA)

AFIR (RACJ)

IRK(T2)[46]
0 NO CLOCK
1 LOAD

DATA TO SEMI-COND MEMORY

BR

LR (PDRB)

PS (IRCH,PDRD)

PIRQ (PDRD)

SL (PDRC)

PB (PDRC)

SL/PB

IBS (T1) [36-35]
0 NO COMMAND
1 READ SW
2 LOAD PS
3 READ PS

FROM SWITCH REGISTER (PDRH)

PIRQ

PS

INTERNAL BUS

D M X (PDRE)

DATA FROM FPP

DATA TO KT11-C REGISTERS AND FPP DATA

DATA FROM KT11-C REGISTERS

11-1019

| FIRST USED ON OPTION/MODEL | QTY. | DESCRIPTION | PART NO. | ITEM NO. |
|---|---|---|---|---|
| 11/45 | | PARTS LIST | | |

UNLESS OTHERWISE SPECIFIED DIMENSION IN INCHES. TOLERANCES
DECIMALS: XXX ± .005, XX ± .02, X ± .1 — ANGLES: ± 0° 30'
REMOVE BURRS AND BREAK SHARP CORNERS SURFACE QUALITY ✓
MATERIAL
FINISH

DRN. DATE
CHK'D DATE 4/11/72
ENG. DATE 4/11/72
PROJ. ENG. DATE 4/11/72
PROD. DATE

NEXT HIGHER ASSY. B-CO-KB11-0

SCALE
SHEET 1 OF 2

digital EQUIPMENT CORPORATION MAYNARD MASSACHUSETTS

TITLE
BLOCK DIAGRAM

SIZE D | CODE BD | NUMBER KB11-A-02 | REV.

DIST

BRUNING 40-522 15840

| REV. | REVISIONS | CHANGE NO | CHK |
|---|---|---|---|

DEC FORM NO ORD 102-B

This drawing and specifications, herein, are the property of Digital Equipment Corporation and shall not be reproduced or copied or used in whole or in part as the basis for the manufacture or sale of items without written permission.

PCA CLOCK [51]; PCA:
Ø-NO CLOCK
1-LOAD

PCA

PCB

PCB CLOCK [49-50]; PCB:
Ø-NO CLOCK
1-LOAD
2-SF7:LOAD
3-DF7:LOAD

SHIFTER [47-48]; SHF:
Ø-SWAP (SWAP BYTES)
1-PCB
2-NO SHIFT
3-RIGHT SHIFT

SHFR

PAD WRITE ENABLE [44-45]; PWE:
Ø-DON'T WRITE
1-CONDITIONAL (SIGNALS SIGN EXTEND ON MOVE)
2-WRITE (UNCONDITIONAL)
3-NOT USED

ARITHMETIC LOGIC UNIT [15-17]; ALU:
Ø-A
1-B
2-Ā
3-A PLUS B
4-NOT USED
5-A PLUS A (LEFT SHIFT)
6-A MINUS B
7-INSTRUCTION DEPENDENT ($)

SCRATCHPAD ADDRESS (GS; GA) [41-43]; PAD:
Ø-SF; SF
1-SF; DF
2-S; S
3-NOT USED
4-SFV; SFV
5-DF; DF
6-Ø; Ø
7-G; G

ALU

(A) (B)

AMX BMX

GR

GS 16X16 REGISTER FILES GD

SR MULTIPLEXOR [60-62]; SRX:
Ø-SHFR
1-GS
2-SF7: SHFR; $\overline{SF7}$: GS
3-NOT USED

DR MULTIPLEXOR [58-59]; DRX:
Ø-SHFR
1-GD
2-DF7: SHFR; $\overline{DF7}$: GD
3-CLEAR DR

CONSOLE DATA LIGHTS
"DATA PATHS"

SRMX DRMX

A MULTIPLEXOR [22-23]; AMX:
Ø-DR
1-PCB
2-SR
3-BR

B MULTIPLEXOR [20-21]; BMX:
Ø-KØMX
1-KIMX
2-SR
3-BR

KØMX KIMX

1
2
SRCCON
DSTCON

SV
TV

CONSTANTS
CONSTANTS MULTIPLEXORS [KØMX; KIMX] [18, 19]; KMX:
Ø-1; SV
1-2; TV
2-SRCCON; SOBEMARK OFFSET
3-DSTCON; BXX OFFSET

SR CLOCK [57]; SRK:
Ø-NO CLOCK
1-LOAD

SR DR

SHIFT REGISTER
DR CLOCK [55-56]; DRK
Ø-DON'T CLOCK
1-SHIFT RIGHT
2-SHIFT LEFT
3-LOAD

SHIFT COUNTER [33-34]; SHC:
Ø-NO COUNT
1-COUNT
2-LOAD (DR-Ø5:ØØ)
3-LOAD (17)

SC

BAMX

VIRTUAL ADDRESS
BUS ADDRESS MULTIPLEXOR [37-38]; BAX:
Ø-DR
1-PCB
2-SR
3-FPU MAINT

FP EALU

INTERNAL BUS [35-36]; IBS:
Ø-NO COMMAND
1-READ SW
2-LOAD PS
3-READ PS

BUS DATA (OUT)

UNIBUS DATA
MOS DATA
BUS INTD (IN)

BRMX

MISCELLANEOUS CONTROL SIGNALS
[27-29]; MSC:
Ø-NO AFFECT
1-FP ATTN
2-NOT USED
3-SET CONF IF KERNEL MODE
4-SPL
5-CONDITIONAL BUST
6-BRQ STROBE
7-BUST (BUS START)

MICRO ADDRESS FIELD [Ø-7]; UAD:
(SEE FLOWS)

BRANCH ENABLE [8-11]; BEN:
(USE FLOWS, Ø IF NOTHING SPECIFIED)

FORK ENABLE [12-13]; FEN:
Ø-NO FORK
1-FORK A
2-FORK B
3-FORK C

CONSOLE DATA LIGHTS
"BUS REGISTER"

BR CLOCK [63]; BRK
Ø-NO CLOCK
1-LOAD

BR

IR

IR CLOCK [96]; IRK:
Ø-NO CLOCK
1-LOAD

BR MULTIPLEXOR [62]; BRX:
Ø-SHFR
1-BUS (DETERMINED BY ADDRESS)

**BUS CONTROL** [20-22]; BCT:
Ø-NO AFFECT
1-PCHL FR
2-**CONS** ACKN
3-CLR FLAGS
4-INIT IF KERNEL MODE
5-**STACK** REF
6-ACKN
7-BENL (BUS END)

CONDITION CODE LOAD [52-54]; CCL:
Ø-NO CHANGE
1-INSTRUCTION LEFT (SUBSIDIARY ROM)
2-SET/CLR CC'S FROM BR (CCC OP-S)
3-LOAD CC'S FROM FPU IF FP ENB
4-CCLD Ø (Z←N ACC SHFR; C←V←Ø)
5-CCLD SCZ (N ACC SHFR; C←AMX15; V←VOLD ⊕ SHFR; S←AMX15)
6-CCLD CNZ (C, V UNAFFECTED; Z←Z ∧ SHFR=Ø)
7-CCLD TCZ (N, C, V UNAFFECTED; C←ALU CARRY)

BUS COND [24-26]; BSC:
Ø-DATI
1-SRC1 DATI
2-KERNAL DATI
3-SRC2 DATI
4-FC
5-DATO
6-BSOP1
7-BSOP2

BUS DELAY [39-40]; BSD
Ø-NO PAUSE
1-INTR PAUSE
2-BUS PAUSE
3-BUS LONG PAUSE

MICROPROGRAM FIELD NAME, BIT POSITIONS, AND ENCODING SHOWN NEXT TO ASSOCIATED DATA PATH ELEMENT

REVISIONS
REV A
CHANGE NO KB11A-0C014
CHK S. JENKINS 3-1-73

DATA PATHS

| FIRST USED ON OPTION/MODEL | QTY. | DESCRIPTION | PART NO. | ITEM NO. |
|---|---|---|---|---|
| 11/45 | PARTS LIST | | | |

UNLESS OTHERWISE SPECIFIED
DIMENSION IN INCHES
TOLERANCES
DECIMALS: XXX ± .005, XX ± .02, X ± .1
ANGLES: ± 0° 30'
REMOVE BURRS AND BREAK SHARP CORNERS. SURFACE QUALITY ✓
MATERIAL
FINISH

DRN. DATE
CHK'D DATE
ENG. DATE
PROJ. ENG. DATE
PROD DATE
NEXT HIGHER ASSY. KB11-C

digital EQUIPMENT CORPORATION MAYNARD MASSACHUSETTS

TITLE KB11-A FLOW DIAGRAMS

SIZE D | NUMBER KB11-A-03 | REV

SCALE
SHEET 1 OF 15

DEC FORM NO. DRD 102-B

REV A | SIZE CODE D | NUMBER FD KB11-A-03

This drawing and specifications, herein, are the property of Digital Equipment Corporation and shall not be reproduced or copied or used in whole or in part as the basis for the manufacture or sale of items without written permission.



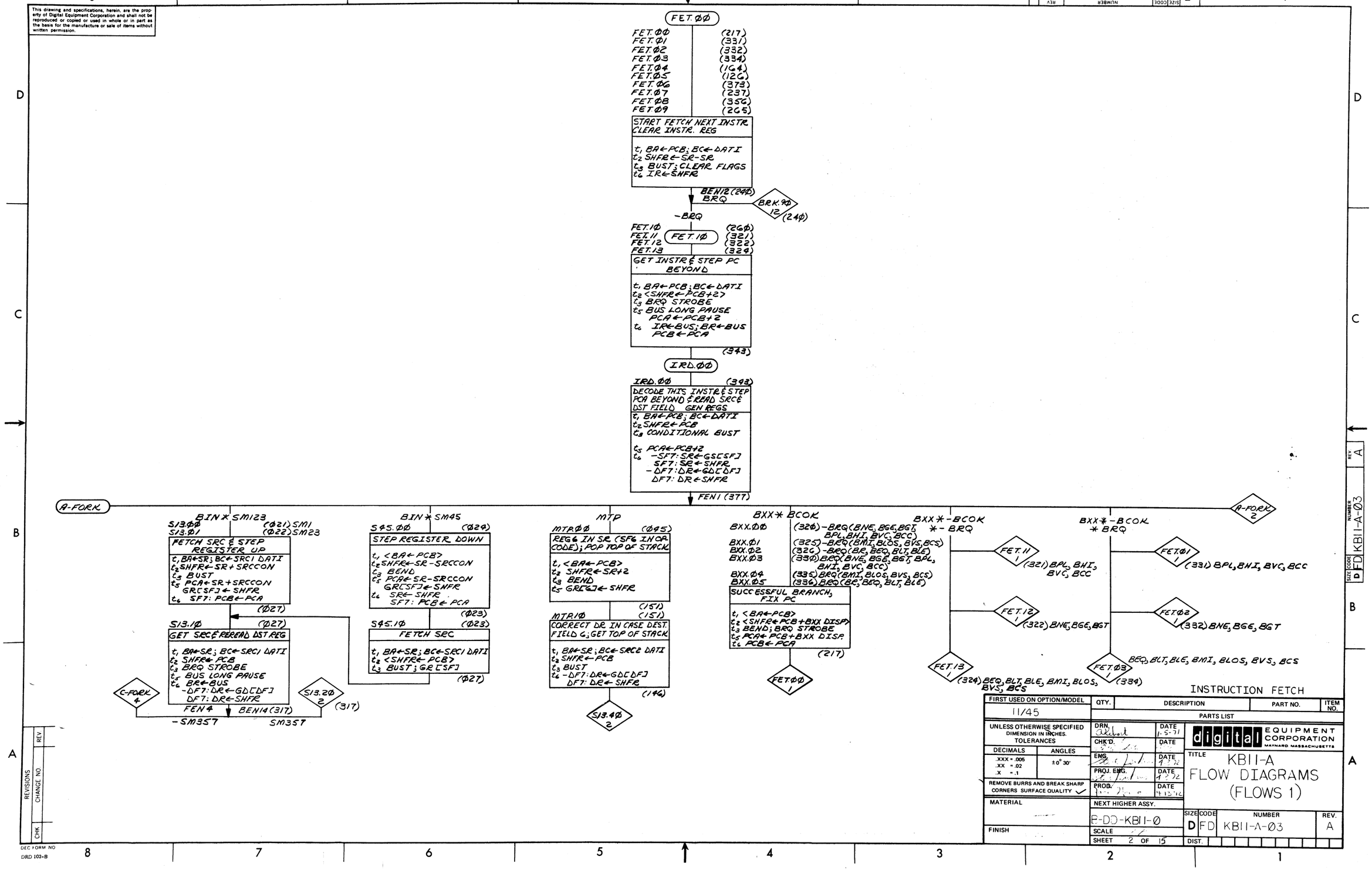


INSTRUCTION FETCH

| FIRST USED ON OPTION/MODEL | QTY. | DESCRIPTION | PART NO. | ITEM NO. |
|---|---|---|---|---|
| 11/45 | | PARTS LIST | | |

UNLESS OTHERWISE SPECIFIED DIMENSION IN INCHES. TOLERANCES

| DECIMALS | ANGLES |
|---|---|
| .XXX = .005<br>.XX = .02<br>.X = .1 | ±0° 30' |

REMOVE BURRS AND BREAK SHARP CORNERS SURFACE QUALITY ✓

MATERIAL

FINISH

| | | |
|---|---|---|
| DRN. | Abbott | DATE 1-5-71 |
| CHK'D. | | DATE |
| ENG. | | DATE 1972 |
| PROJ. ENG. | | DATE 1972 |
| PROD. | | DATE 4/15/72 |

digital EQUIPMENT CORPORATION MAYNARD MASSACHUSETTS

TITLE KB11-A FLOW DIAGRAMS (FLOWS 1)

NEXT HIGHER ASSY. B-DD-KB11-Ø

SCALE

SHEET 2 OF 15

| SIZE | CODE | NUMBER | REV. |
|---|---|---|---|
| D | FD | KB11-A-Ø3 | A |

DIST.

REVISIONS | REV | CHANGE NO | CHK

DEC FORM NO DRD 102-B

This drawing and specifications, herein, are the property of Digital Equipment Corporation and shall not be reproduced or copied or used in whole or in part as the basis for the manufacture or sale of items without written permission.



A-FORK

BIN*SM67

SG7.ØØ (ØØ6)
GET INDEX WORD; FIXUP SR & DR TO POINT BEYOND INDEX WORD IF SF7 OR DF7
t, BA←PCB; BC←DATI
t₂ SHFR←PCB+2
t₃ BUS PAUSE
t₄ BR←BUS
-SF7: SR←GS[SF]
SF7: SR←SHFR
-DF7: DR←GD[DF]
DF7: DR←SHFR
(ØS4)

SG7.1Ø (ØS4)
DO INDEXING; FIX UP PC TO POINT BEYOND INDEX WORD; DON'T CHANGE ADDR OR C LINES
t, BA←PCB; BC←DATI
t₂ SHFR←SR+BR
t₄ SR←SHFR
PCB←PCA
(161)

SG7.2Ø (161)
FETCH SRC; NO SL CHECK
t, BA←SR; BC←SRC1 DATI
t₂ <SHFR←PCB>
t₃ BUST; GRC[Ø]
(162)

SG7.3Ø (162)
GET S.RC
t, BA←SR; BC←SRC1 DATI
t₂ <SHFR←PCB>
t₃ BRQ STROBE
t₅ BUS LONG PAUSE
t₆ BR←BUS
FEN4 BEN1Ø(317) -SM357 → C-FORK 4

S13.2Ø
S13.2Ø (317)
SRC ADDRS TO SR (INDIRECT)
t, <BA←PCB>
t₂ SHFR←BR
t₄ SR←SHFR
(143)

S13.3Ø (143)
FETCH SRC OPERAND; NO SL CHECK
t, BA←SR; BC←SRC2 DATI
t₂ <SHFR←PCB>
t₃ BUST; GRC[Ø]
(146)

S13.4Ø
S13.4Ø (146)
GET SRC OPERAND
t, BA←SR; BC←SRC2 DATI
t₂ <SHFR←PCB>
t₃ BRQ STROBE
t₅ BUS LONG PAUSE
t₆ BR←BUS
FEN4 (377)
→ C-FORK 4

F/CLASS

FOP.ØØ (1ØØ)
BACKUP PC TO POINT AT INSTR; ENABLE FP ATTN
t, <BA←PCB>
t₂ SHFR←PCB-2
t₃ BEND
t₅ PCA←PCB-2
t₆ FP ATTN
PCB←PCA
SR←SHFR
(133)

FOP.1Ø (133)
LOOK FOR BREAK REQUESTS SEND PC & OPCODE TO FPU WITH FP ATTN
t, BA←PCB
t₂ <SHFR←BR7>
BEN@7(154) BRQ*-(CONF+T) → BRK.ØØ 12 (154)

FOP.2Ø (174)
CLK BREAKS; SEND PC & OP CODE TO FPU & LOOK FOR FP READY
t, BA←PCB
t₂ <SHFR←BR>
t₃ BRQ STROBE
BEN@Ø (133) -FP SYNC
(173)

FOP.3Ø (173)
STEP PC & GET FPU STATUS
t, <BA←FP EAU7 READ FP
t₂ SHFR←PCB+2
t₅ PCA←PCB+2
t₆ BR←BUS
PCB←PCA
FEN4 (377)
→ C-FORK 4

RTI+RTT

RTI.ØØ (Ø12) RTI
RTI.Ø1 (Ø14) RTT
GET STACK POINTER (SP)
t, <BA←PCB>
t₂ <SHFR←BR>
t₃ BEND
t₆ SR←GS[6]
(156)

RTI.1Ø (156)
FETCH TOP OF STACK (NEW PC)
t, BA←SR; BC←DATI
t₂ <SHFR←BR>
t₃ BUST; GRC[6]
(212)

RTI.2Ø (212)
STEP STACK POINTER (POP); ADRS OF NEXT WORD TO DR GET NEW PC
t, BA←SR; BC←DATI
t₂ SHFR←SR+2
t₅ BUS LONG PAUSE
GRC[6]←SHFR
t₆ BR←BUS
SHFR←DR
(213)

RTI3Ø (213)
FETCH TOP OF STACK (NEW PS)
t, BA←DR; BC←DATI
t₂ <SHFR←PCB>
t₃ BUST; GRC[7]
t₅ PCA←BR
t₆ PCB←PCA
(214)

RTI.4Ø (214)
STEP STACK POINTER; GET NEW PS
t, BA←DR; BC←DATI
t₂ SHFR←DR+2
BUS PAUSE
t₅ GRC[6]←SHFR
t₆ BR←BUS
(215)

RTI.5Ø
RTI.5Ø (215)
NEW PS TO PS; DON'T CHANGE ADDR OR C LINES
t, BA←DR; BC←DATI
t₂ <SHFR←PCB7>
t₄ PS←BR
(172)

RTI.6Ø
RTI.6Ø (172)
CLOCK BREAKS
t, <BA←DR7>
t₂ <SHFR←PCB7>
t₃ BRQ STROBE
t₄ CONS ACKN
(217)
→ FET.ØØ 1

RTS

RTS.ØØ (Ø9Ø)
DST FIELD REG TO PC; GET STACK POINTER (SP)
t, <BA←PCB>
t₂ <SHFR←DR>
t₃ BEND
t₅ PCA←DR
t₆ SR←GS[6]
PCB←PCA
(223)

RTS.1Ø (223)
FETCH TOP OF STACK AND STEP SP
t, BA←SR; BC←DATI
t₂ SHFR←SR+2
t₃ BUST
t₅ GRC[6]←SHFR
(224)

RTS.2Ø (224)
GET TOP OF STACK TO BR
t, BA←SR; BC←DATI
t₂ <SHFR←PCB>
BUS PAUSE
t₆ BR←BUS
(342)

RTS.3Ø (342)
BR (TOP OF STACK) TO DST FIELD REG; DON'T CHANGE ADDR OR C LINES
t, BA←SR; BC←DATI
t₂ SHFR←BR
t₃ BRQ STROBE
PCA←BR
t₅ GRC[DF]←SHFR
t₆ DF7: PCB←PCA
(217)
→ FET.ØØ 1

SOB

SOB.ØØ (Ø57)
OLD PC TO BR & PC-OFF-SET TO PC
t, <BA←PCB>
t₂ SHFR←PCB
t₃ BEND
BRQ STROBE
t₅ PCA←PCB-SOB OFFSET
t₆ BR←SHFR
PCB←PCA
BEN@Ø (242) SA≠1
SA=1

SOB.1Ø (242)
FALL THRU SOB (OLD PC TO PC)
t, <BA←SR>
t₂ <SHFR←BR>
t₃ BRQ STROBE
t₅ PCA←BR
t₆ PCB←PCA
(262)

SOB.2Ø (262)
DECREMENT SRC FIELD REG (LOOP COUNT) & START NEXT INSTR FETCH
t, BA←PCB; BC←DATI
t₂ SHFR←SR-1
t₃ BUST
t₆ GRC[SF]←SHFR
BEN12 (24Ø) BRQ → BRK.9Ø 12 (24Ø)
-BRQ
→ FET.1Ø 1 (26Ø)

MARK

MRK.ØØ (Ø47)
PC+OFFSET TO DR & RST0 SR
t, <BA←PCB>
t₂ SHFR←PCB+MARK OFFSET
t₃ BEND
t₆ SR←GS[5]
DR←SHFR
(252)

MRK.1Ø (252)
RS TO PC; DR POINTS TO TOP OF STACK
t, BA←DR; BC←DATI
t₂ <SHFR←SR>
t₃ BUST
t₅ PCA←SR
t₆ PCB←PCA
(235)

MRK.2Ø (235)
GET TOP OF STACK, STEP SP
t, BA←DR; BC←DATI
t₂ SHFR←DR+2
t₃ BRQ STROBE
t₅ BUS LONG PAUSE
GRC[6]←SHFR
t₆ BR←BUS
(234)

MRK.3Ø (234)
START FETCH NEXT INSTR & TOP OF STACK TO RS
t, BA←PCB; BC←DATI
t₂ SHFR←BR
t₃ BUST
t₅ GRC[RS]←SHFR
BEN12 (29Ø) BRQ → BRK.9Ø 12 (29Ø)
-BRQ
→ FET.1Ø 1 (26Ø)

→ A-FORK 3

CONTROL; FLOATING; INDEXED SOURCE

| FIRST USED ON OPTION/MODEL | QTY. | DESCRIPTION | PART NO. | ITEM NO. |
|---|---|---|---|---|
| 11/45 | | PARTS LIST | | |

UNLESS OTHERWISE SPECIFIED DIMENSION IN INCHES. TOLERANCES
DECIMALS: XXX = .005, XX = .02, X = .1; ANGLES: ±0° 30'
REMOVE BURRS AND BREAK SHARP CORNERS SURFACE QUALITY ✓
MATERIAL
FINISH

DRN. Skloot DATE 2-13-72
CHK'D. DATE
ENG. DATE 9-2-72
PROJ. ENG. DATE 9-2-72
PROD. DATE 9-13-72
NEXT HIGHER ASSY. B-DD-KB11-Ø

digital EQUIPMENT CORPORATION MAYNARD MASSACHUSETTS

TITLE KB11-A FLOW DIAGRAMS (FLOWS 2)

SIZE D | CODE FD | NUMBER KB11-A-03 | REV. A
SCALE
SHEET 3 OF 15
DIST.

REVISIONS: REV | CHANGE NO | CHK
BRUNING 40-522 15840
DEC FORM NO DRD 102-B

This drawing and specifications, herein, are the property of Digital Equipment Corporation and shall not be reproduced or copied or used in whole or in part as the basis for the manufacture or sale of items without written permission.



A-FORK

## RESET

RES.ØØ

RES.ØØ (Ø15)
GET R0 TO DR
t1 <BA←PCB>
t2 <SHFR←BR>
t3 BEND
t4 DR←GD[Ø]
(255)

RES.1Ø (255)
INIT IF IN KERNEL MODE
t1 <BA←PCB>
t2 <SHFR←DR>
t3 START INIT IF PS 14 (Ø)
(374)

RES.2Ø (379)
WAIT FOR INIT DONE SHOW PC AND R0
t1 BA←PCB
t2 SHFR←DR
t3 BRQ STROBE
t4 CNSL ACKN
RIP
BEN1Ø (334)

-RIP
FET.Ø3 1
(334)

## HALT

HLT.ØØ (Ø1Ø)
GET R0 AND PS; PC TO SR
t1 <BA←PCB>
t2 SHFR←PCB
t3 BEND
t4 BR←PS
DR←GD[Ø]
SR←SHFR
(327)

HLT.1Ø (327)
SET CONSOLE FLAG IF KERNEL MODE OTHERWISE TRAP
t1 <BA←PCB>
t2 <SHFR←BR>
t3 CONF←1 IF PS14:(Ø)

BEN.Ø6 (124)
BR14 (1)
TRP Ø2 12 (124)
BR14 (Ø)
FET.Ø4 1 (164)

## CCOP

CCP.ØØ (Ø97)
CONDITION CODE OPERATE INSTR
t1 <BA←PCB>
t2 <SHFR←BR>
t3 BRQ STROBE
t4 CC←IR (SET OR CLR SEL. BITS)
(217)

FET Ø4 1

OP3 → TRP.ØØ 12 (Ø13)
IOT → TRP.Ø1 12 (Ø19)
OP7 → RSD.Ø1 12 (Ø17)

## WAIT

WAT.ØØ (Ø11)
READ R0 AND SHOW IT SHOW PC IN ADRS LIGHTS
t1 BA←PCB
t2 SHFR←DR
t3 BEND
t4 DR←GD[Ø]
BEN12 (244)
BRQ

-BRQ

WAT.1Ø (264)
WAT.11 (273)
NO BREAK REQUESTS
t1 BA←PCB
t2 SHFR←DR
t3 BRQ STROBE
(Ø11)

WAT.2Ø (299)
BREAK REQUEST; GET VECTOR WAS IT HALT SW?
t1 <BA←PCB>
t2 SHFR←TV
INTR PAUSE
t6 DR←SHFR
BR←BUS
BEN 12(127)

CONF → CON.Ø1 14 (167)
-CONF

WAT.3Ø (127)
IF T BIT WAIT; OTHERWISE GO SERVICE
t1 <BA←PCB>
t2 <SHFR←BR>
BEN Ø2 (253)

-(PWRF+INTRF)

(PWRF+INTRF)
BRK 11 12 (253)

## OP 22

RSD.Ø2 12 (Ø92)

## SPL

SPL.ØØ (Ø93)
SET PRIORITY LEVEL
t1 <BA←...B>
t2 <SHRF←BA>
t3 BEND
t5 BA:PS<7:5>←BA<2:0>
IF KERN MODE

SPLØ (361) (361)
START FETCH OF NEXT INSTR
t1 BA←PCB; BC←DATI
t2 <SNFR←PCB>
t3 BUST
CLR FLAGS
(26Ø)

FET.1Ø 1

## RSVD +EMT+TRAP

RSD.Ø9 12 (ØØØ)

## F/CLASS*-(FP PRESENT)

RSD.ØØ 12 (ØØØ)

A-FORK 5

A-FORK

## (JMP+JSR)*DMØ

RSDØØ 12 (ØØØ)

## NEG.B DMØ

NEG.7Ø (3Ø1)
COMPLEMENT DST FIELD RES
t1 <BA←PCB>
t2 SHFR←ALU$ (A=DR, B=1)
t3 BEND
t6 SR←SHFR
(21Ø)

NEG.9Ø (21Ø)
INCREMENT AND SAVE DST
t1 <BA←SR>
t2 SHRF←SR+1
t3 BRQ STROBE
t5 PCA←SR+1
-I/CLASS:GR[DF]←SHFR
t6 CCLD$ DF?: PCB←PCA
(217)

FET.ØØ 1

## ASH*DMØ

ASH.1Ø 7 (Ø52)

## ASHC*DMØ

ASC.1Ø 7 (Ø53)

## MFP*DMØ

MFP.8Ø 11 (Ø9C)

## E/CLASS*-[DF7+BRQ]*DMØ

EXC.8Ø

EXC.8Ø (Ø2Ø)
SRC MODE≠DST MODEØ FINISH EXEC OF THIS AND FETCH NEXT INSTR
t1 BA←PCB; BC←DATI
t2 SHFR←ALU$ (A=DR, B=SR)
t3 BRQ STROBE
t5 BUS LONG PAUSE -I/CLASS:GR[DF]←SHFR
t6 CCLD$ IR←BUS; BR←BUS PCB←PCA
(393)

IRD.ØØ 1

## E/CLASS*[DF7+BRQ]*DMØ

EXC.9Ø

EXC.9Ø (Ø3Ø)
SOURCE≠DST MODEØ FINISH EXECUTE OF THIS INSTR
t1 <BA←PCB>
t2 SHFR←ALU$ (A=DR, B=SR)
t3 BEND
BRQ STROBE
t5 PCA←ALU$ -I CLASS:GR[DF]←SHFR
t6 CCLD$ DF?: PCB←PCA
(217)

FET.ØØ 1

## MUL*DMØ

MUL.8Ø (Ø5Ø)
SETUP SHIFT COUNTER
t1 <BA←PCB>
t2 <SHFR←DR>
t3 BEND
SC←17
(1Ø2)

MUL.1Ø 8

## DIV*DMØ

DVS.ØØ (Ø51)
DIVISOR TO BR
t1 <BA←PCB>
t2 SHFR←DR
t3 BEND
t6 BR←SHFR
(Ø61)

DIVØØ 9

P/CLASS:=SWAB+CLR.B+COM.B+INC.B+DEC.B +NEG.B+ADC.B+SBC.B+ASR.B+ASL.B+ROR.B+ROL.B+BIC.B+BIS.B+ADD+SUB +SXT+MOVB+XOR
I/CLASS:=TST.B+CMP.B+BIT.B+MUL+DIV+MFP
E/CLASS:=[P/CLASS*-NEG.B]+MOV+TST.B+CMP.B +BIT.B

EXECUTE NO MEM REF

| FIRST USED ON OPTION/MODEL | QTY. | DESCRIPTION | PART NO. | ITEM NO. |
|---|---|---|---|---|
| 11/45 | | PARTS LIST | | |

UNLESS OTHERWISE SPECIFIED
UNLESS OTHERWISE SPECIFIED DIMENSION IN INCHES
TOLERANCES DECIMALS ± .005 FRACTIONS ± 1/64 ANGLES ± 0°30'
FINAL SURFACE QUALITY REMOVE BURRS AND BREAK SHARP CORNERS

MATERIAL

FINISH

| | | |
|---|---|---|
| DRN. aKibat | DATE 9-2-71 | digital EQUIPMENT CORPORATION MAYNARD, MASSACHUSETTS |
| CHK'D. | DATE 9/12/72 | |
| ENG. | DATE 9-3-72 | TITLE KBII-A FLOW DIAGRAMS (FLOWS 3) |
| PROJ. ENG. | DATE 9-3-72 | |
| PROD. | DATE 9-13-72 | |

NEXT HIGHER ASSY B-DD-KBII-Ø

SCALE

SHEET 4 OF 15

| SIZE | CODE | NUMBER | REV. |
|---|---|---|---|
| D | FD | KBII-A-Ø3 | A |

DIST.

| REVISIONS | CHANGE NO. | CHK | REV |
|---|---|---|---|

DEC FORM NO DRD 102A

This drawing and specifications, herein, are the property of Digital Equipment Corporation and shall not be reproduced or copied or used in whole or in part as the basis for the manufacture or sale of items without written permission.



C-FORK

DM0* - F/CLASS
* - DF7 * SR0(0)

DM0* - F/CLASS
* - DF7 * SR0(1)

DM0* - F/CLASS
* DF7 * SR0(0)

DM0* - F/CLASS
* DF7 * SR0(1)

DM0* F/CLASS

C-FORK 5

D00.80 (204)
ODD BYTE SRC, RIGHT JUSTIFY
$t_1$ <BA←DR>
$t_2$ SHFR←SWAP(BR)
$t_3$ BRQ STROBE
$t_4$ BR←SHFR
(205)

D07.10 (203)
MODIFYING THE PC
$t_1$ <BA←DR>
$t_2$ SHFR←BR
$t_4$ SR←SHFR
(030)

D07.00 (202)
MODIFYING THE PC-ODD BYTE
$t_1$ <BA←DR>
$t_2$ SHFR←SWAP(BR)
$t_4$ SR←SHFR
(030)

FOP.50 (211)
LOAD CCS IF TOLD TO; FP STATUS IN BR.
$t_1$ <BA←EALU>
$t_2$ <SHFR←DR>
$t_3$ BEND
$t_4$ CC←BR(FPCC) IF ENABLED BY FPU
(362)

D00.90 (205)
DST MODE0 BUT SRC MODE NOT FINISH; EXECUTE THIS & FETCH NEXT
$t_1$ BA←ACB; BC←DATI
$t_2$ SHFR←ALU $ (A=DR, B=BR)
$t_3$ BUST
$t_5$ -I/CLASS:GR[DF]←SHFR
$t_6$ CCLD $
BEN12 (290)

EXC.90 3

FOP.60 (362)
PUT DEST REG IN BR & ENABLE FP ATTN
$t_1$ <BA←EALU>
$t_2$ SHFR←DR
$t_6$ FP ATTN
BR←SHFR
316

BE17

FOP.70 (316)
SEND FP ATTN & WAIT FOR FPU
$t_1$ <BA←EALU>
$t_2$ SHFR←BR
BEN17(316)

BRQ

BRK.90 12 (240)

-BRQ

FET.10 1 (260)

FP SYNC * FP REG WR

-FP SYNC

FP SYNC

FET.00 1 (356)

FOP.80 (376)
GET FP DATA
$t_1$ <BA←EALU>
FP READ
$t_2$ <SHFR←BR>
$t_6$ BR←BUS
(375)

FOP.90 (375)
MODIFY DEST REG & ENABLE FP ATTN.
$t_1$ <BA←EALU>
$t_2$ SHFR←BR
$t_5$ GR[DF]←SHFR
$t_6$ FP ATTN
(316)

FOP.70 4

DESTINATION MODE 0

| FIRST USED ON OPTION/MODEL | QTY. | DESCRIPTION | PART NO. | ITEM NO. |
|---|---|---|---|---|
| 11/45 | | PARTS LIST | | |

UNLESS OTHERWISE SPECIFIED DIMENSION IN INCHES. TOLERANCES
DECIMALS: .XXX ± .005, .XX ± .02, .X ± .1; ANGLES: ± 0° 30'
REMOVE BURRS AND BREAK SHARP CORNERS SURFACE QUALITY ✓
MATERIAL: ##
FINISH: ##

DRN. Gilbert DATE 11/6/72
CHK'D. DATE:
ENG. Steve Forbes DATE 4-3-72
PROJ. ENG. Steve Forbes DATE 4-3-72
PROD. Jack Devine DATE 4-13-72
NEXT HIGHER ASSY. B-DD-KBII-0
SCALE ##
SHEET 5 OF 15

digital EQUIPMENT CORPORATION MAYNARD MASSACHUSETTS

TITLE
KBII-A
FLOW DIAGRAMS
(FLOWS 4)

SIZE D | CODE FD | NUMBER KBII-A-03 | REV A
DIST.

REVISIONS | REV | CHANGE NO | CHK

BRUNING 40-522 15840
DEC FORM NO DRD 102-B

This drawing and specifications, herein, are the property of Digital Equipment Corporation and shall not be reproduced or copied or used in whole or in part as the basis for the manufacture or sale of items without written permission.



A-FORK

DAC * DM12

C-FORK

D12.00 (00)DM1
D12.01 (00)DM2

DESTINATION ADRS IN DR
SRC OPERAND IN BR & SR;
CHECK STACK LIM.

$t_1$ BA ← DR; BC ← BSOPI
$t_2$ SHFR ← SR
$t_3$ BUST; GR [DF]
$t_4$ BR ← SHFR

BEN13 (115)

DM12 * SR0(0)

D12.80 (111)

DST ADRS IN DR; SRC OPERAND IN BR & SR
CHECK STACK LIMIT

$t_1$ BA ← DR; BC ← BSOPI
$t_2$ SHFR ← BR
$t_3$ BUST; GR [DF]
$t_4$ SR ← SHFR
CC ← BR (FPCC)
IF ENABLE BY FPU

BEN15(115)

DM12 * SR0(1)

D12.90 (110)

DST ADRS IN DR; RIGHT JUSTIFY SRC
CHECK STACK LIMIT

$t_1$ BA ← DR; BC ← BSOPI
$t_2$ SHFR ← SWAP (BR)
$t_3$ BUST; GR [DF]
$t_4$ SR ← SHFR
CC ← BR (FPCC;
IF ENABLE BY FPU

BEN15(115)

DM3 * SR0(0)

D30.80 (113)

FETCH DST OPERAND ADRS
SRC OPERAND IN SR & BR

$t_1$ BA ← DR; BC ← DATI
$t_2$ SHFR ← BR
$t_3$ BUST; GR [DF]
$t_4$ SR ← SHFR
CC ← BR (FPCC)
IF ENABLED BY FPU

(221)

DM3 * SR0(1)

D30.90 (112)

FETCH DST OPERAND ADRS
RIGHT JUSTIFY SRC TO SR

$t_1$ BA ← DR; BC ← DATI
$t_2$ SHFR ← SWAP (BR)
$t_3$ BUST; GR [DF]
$t_4$ SR ← SHFR
CC ← BR (FPCC)
IF ENABLED BY FPU

(221)

DAC * DM3

D30.00 (003)

FETCH DST OPERAND ADRS
SRC IN SR

$t_1$ BA ← DR; BC ← DATI
$t_2$ < SHFR ← SR >
$t_3$ BUST; GR [DF]

(221)

D30.10 (221)

GET DST OPERAND ADRS
STEP DST FIELD REGISTER

$t_1$ BA ← DR; BC ← DATI
$t_2$ SHFR ← DR + DSTCON
BUS PAUSE
$t_5$ PCA ← DR + DSTCON
GR [DF] ← SHFR
$t_6$ BR ← BUS
DF7: PCB ← PCA

(233)

D10.20
6

O/CLASS

D12.60 (155)

STEP DST FIELD REG &
OUTPUT SRC TO DST (DATO)

$t_1$ BA ← DR; BC ← BSOPI
$t_2$ SHFR ← DR + DSTCON
$t_3$ BRQ STROBE
$t_5$ BUS LONG PAUSE
PCA ← DR + DSTCON
GR [DF] ← SHFR
$t_6$ DF7: PCB ← PCA

(312)

D12.20 (312)

FETCH NEXT INSTR
SET CONDITION CODES

$t_1$ BA ← PCB; BC ← DATI
$t_2$ SHFR ← BR
$t_3$ BUST; GR [DF]
$t_6$ CCLD $

BEN12 (290)

BRQ — BRK.90 12 (240)

− BRQ

FET.10 1 (260)

-FJ/CLASS * -O/CLASS

D12.10 (175)

FINISH DATIP OR DATI &
STEP DST FIELD REG

$t_1$ BA ← DR; BC ← BSOPI
$t_2$ SHFR ← DR + DSTCON
BUS PAUSE
$t_3$ BRQ STROBE
$t_5$ PCA ← DR + DSTCON
GR [DF] ← SHFR
$t_6$ BR ← BUS
DF7: PCB ← PCA

BEN05 (137)
FEN2

DR0(1)

D12.30

D12.30 (137)

ODD BYTE DST, RIGHT
JUSTIFY; DON'T
CHANGE ADDR OR C LINES

$t_1$ BA ← DR; BC ← BSOPI
$t_2$ SHFR ← SWAP (BR)
$t_6$ BR ← SHFR

FEN2 (377)

B-FORK 7

FJ/CLASS

D12.70 (135)

STEP DST FIELD REGISTER

$t_1$ < BA ← DR >
$t_2$ SHFR ← DR + DSTCON
$t_3$ BEND
BRQ STROBE
$t_5$ PCA ← DR + DSTCON
GR [DF] ← SHFR
$t_6$ DF7: PCB ← PCA

FEN2 (137)

B-FORK 7

DR0(0)

B-FORK 7

BIN := MOV.B + CMP.B + BIT.B + BIS.B + BIC.B + ADD + SUB
DAC := [J/CLASS + F/CLASS] * [-BIN + SM0] + [MOV * SM0] + ASH + ASHC + JMP + JSR
O/CLASS := MOV + MTP
F/CLASS := IR<15:12> (17)
J/CLASS := JMP + JSR
FJ/CLASS := F/CLASS + J/CLASS
BSOP1 := [I/CLASS : DATI] + [P/CLASS : DATIP] + [O/CLASS : DATO]
BSOP2 := [DATO] + [BYTE INSTRUCTION : DATOB]

DESTINATION MODES 1-3

| REVISIONS | REV | CHANGE NO | CHK |
|---|---|---|---|

| FIRST USED ON OPTION/MODEL | QTY. | DESCRIPTION | PART NO. | ITEM NO. |
|---|---|---|---|---|
| 11/45 | | PARTS LIST | | |

UNLESS OTHERWISE SPECIFIED
UNLESS OTHERWISE SPECIFIED
DIMENSION IN INCHES
TOLERANCES
DECIMALS ± .005 FRACTIONS ± 1/64 ANGLES ± 0°30'
FINAL SURFACE QUALITY
REMOVE BURRS AND BREAK SHARP CORNERS

MATERIAL

FINISH

DRN. — DATE 9/17/71
CHK'D — DATE 11/12/72
ENG. — DATE 1-3-72
PROJ. ENG. — DATE 1-3-72
PROD. — DATE 1-13-72
NEXT HIGHER ASSY B-DD-KB11-0
SCALE —
SHEET 6 OF 15

digital EQUIPMENT CORPORATION MAYNARD MASSACHUSETTS

TITLE
KB11-A
FLOW DIAGRAMS
(FLOWS 5)

| SIZE | CODE | NUMBER | REV |
|---|---|---|---|
| D | FD | KB11-A-03 | A |

DIST.

DEC FORM NO DRD 102A

SIZE D | CODE FD | NUMBER KB11-A-03 | REV A

This drawing and specifications, herein, are the property of Digital Equipment Corporation and shall not be reproduced or copied or used in whole or in part as the basis for the manufacture or sale of items without written permission.

AFORK

C-FORK

DM45 * SRØ(Ø)

D45.8Ø (115)
STEP DST FIELD REGISTER
t1 <BA←DR>
t2 SHFR←DR-DSTCON
t5 PCA←DR-DSTCON
GRCDF]←SHFR
t6 DR←SHFR
DF7: PCB←PCA
CC←BR(FPCC) IF ENABLED BY FPU

BEN Ø I (121)

-DM357

D40.2Ø (121)
DATIP,DATI,DATO DST SRC OPERAND TO SR; CHECK STACK LIMIT
t1 BA←DR; BC←BSOPI
t2 SHFR←BR
t3 BUST;GR[DF]
t6 SR←SHFR

BEN15 (157)
FEN2

DM357

D50.2Ø (161)
FETCH DST OPERAND ADRS; SRC OPERAND TO SR
t1 BA←DR; BC←DATI
t2 SHFR←BR
t3 BUST;GR[DF]
t6 SR←SHFR

(231)

D1Ø.1Ø
6

DM45 * SRØ(1)

D45.9Ø (114)
STEP DST FIELD REGISTER; ODD BYTE SOURCE
t1 <BA←DR>
t2 SHFR←DR-DSTCON
t3 BRQ STROBE
t5 PCA←DR-DSTCON
GR[DF]←SHFR
t6 DR←SHFR
DF7: PCB←PCA
CCLD 3

BEN Ø I (131)

-DM357

D40.3Ø (131)
DATIP,DATI,DATO DST RIGHT JUSTIFY SRC TO SR
CHECK STACK LIMIT
t1 BA←DR; BC←BSOPI
t2 SHFR←SWAP(BR)
t3 BUST; GR[DF]
t6 SR←SHFR

BEN15 (177)
FEN2

-FJ/CLASS

D1Ø.6Ø
6
(177)

FJ/CLASS

B-FORK
7

DM357

D50.3Ø (171)
FETCH DST OPERAND ADRS; RIGHT JUSTIFY SRC TO SR
t1 BA←DR; BC←DATI
t2 SHFR←SWAP(BR)
t3 BUST; GR[DF]
t6 SR←SHFR

(231)

D1Ø.1Ø

D1Ø.1Ø (231)
GET DST OPERAND ADRS
t1 BA←DR; BC←DATI
t2 <SHFR←BR>
BUS PAUSE
t6 BR←BUS

(239)

D1Ø.2Ø

D1Ø.2Ø (233)
DST OPERAND ADRS TO DR DON'T CHANGE ADDR OR C LINES
t1 BA←DR; BC←DATI
t2 SHFR←BR
t3 BRQ STROBE
t6 DR←SHFR

(311)

D1Ø.5Ø (311)
DATIP,DATI,DATO DST SRC OPERAND TO BR
t1 BA←DR; BC←BSOPI
t2 SHFR←SR
t3 BUST; GR[ØØ]
t6 BR←SHFR

BEN15 (157)
FEN2

-Ø/CLASS * -FJ/CLASS

D1Ø.6Ø

D1Ø.6Ø (177)
FINISH DATIP,DATI DST
t1 BA←DR; BC←BSOPI
t2 <SHFR←BR>
BUS PAUSE
t3 BRQ STROBE
t6 BR←BUS

BEN05 (137)
FEN2

D12.3Ø
5
(137)

DRØ(1)

DRØ(Ø)

B-FORK
7

Ø/CLASS

D1Ø.4Ø

D1Ø.4Ø (157)
FINISH DATO DST; LOAD CC'S
t1 BA←DR; BC←BSOPI
t2 SHFR←BR
t3 BRQ STROBE
t5 BUS LONG PAUSE
t6 CCLD 8

(331)

FETØ1
1

DAC * DM45

D45.ØØ (ØØ4) DM4
D45.Ø1 (ØØ5) DM5
STEP DST FIELD REGISTER
t1 <BA←PCB>
t2 SHFR←DR-DSTCON
t3 BEND
t5 PCA←DR-DSTCON
GR[DF]←SHFR
t6 DR←SHFR
DF7: PCB←PCA

BEN Ø I (122)

DM357

D1Ø.ØØ

D1Ø.ØØ (162)
FETCH DST OPERAND ADRS
t1 BA←DR; BC←DATI
t2 <SHFR←PCB>
t3 BUST; GR[DF]

(231)

-DM357

D1Ø.3Ø (122)
DATIP,DATI,DATO DST SRC OPERAND TO BR
CHECK STACK LIMIT
t1 BA←DR; BC←BSOPI
t2 SHFR←SR
t3 BUST; GR[DF]
t6 BR←SHFR

BEN15 (157)
FEN2

FJ/CLASS

B-FORK
7

DMG7 * SRØ(Ø)

D67.8Ø (117)
FETCH INDEX WORD; SRC TO SR
t1 BA←PCB; BC←DATI
t2 SHFR←BR
t3 BUST; GR[Ø]
t6 SR←SHFR
CC←BR(FPCC) IF ENABLED BY FPU

(ØØG)

DMG7 * SRØ(1)

D67.9Ø (116)
FETCH INDEX WORD; RIGHT JUSTIFY SRC TO SR
t1 BA←PCB; BC←DATI
t2 SHFR←SWAP(BR)
t3 BUST; GR[Ø]
t6 SR←SHFR
CC←BR(FPCC) IF ENABLED BY FPU

(ØØG)

DAC * DMG7

D67.ØØ (ØØG) DMG
D67.Ø1 (ØØ7) DM7
GET INDEX WORD; ADJUST DST IF DST FIELD PC
t1 BA←PCB; BC←DATI
t2 SHFR←PCB+2
BUS PAUSE
t5 PCA←PCB+2
t6 BR←BUS
-DF7: DR←GDCDF]
DF7: DR←SHFR

(251)

D67.1Ø (251)
DO INDEXING; STEP PC; DON'T CHANGE ADDR OR C LINES
t1 BA←PCB; BC←DATI
t2 SHFR←BR+DR
t3 BRQ STROBE
t6 DR←SHFR
PCB←PCA

BEN Ø I (122)

-DM357

DM357

D1Ø.ØØ
6
(162)

DESTINATION MODES 4-7

| FIRST USED ON OPTION/MODEL | QTY. | DESCRIPTION | PART NO. | ITEM NO. |
|---|---|---|---|---|
| 11/45 | | PARTS LIST | | |

UNLESS OTHERWISE SPECIFIED DIMENSION IN INCHES. TOLERANCES
DECIMALS: XXX ± .005, XX ± .02, X ± .1 — ANGLES: ± 0° 30'
REMOVE BURRS AND BREAK SHARP CORNERS SURFACE QUALITY ✓
MATERIAL
FINISH

DRN Abbott DATE 5-13-72
CHKD DATE 7/18/72
ENG DATE 9-7-72
PROJ. ENG DATE 9-7-72
PROD DATE 9-13-72
NEXT HIGHER ASSY. B-DD-KB11-Ø

digital EQUIPMENT CORPORATION MAYNARD MASSACHUSETTS

TITLE
KB11-A
FLOW DIAGRAMS
(FLOWS 6)

SIZE D CODE FD NUMBER KB11-A-Ø3 REV. A
SCALE
SHEET 7 OF 15
DIST

| REV | REVISIONS | CHK |
|---|---|---|
| A | CHANGE NO | |

BRUNING 40-522 15840
DEC FORM NO DRD 102-B

This drawing and specifications, herein, are the property of Digital Equipment Corporation and shall not be reproduced or copied or used in whole or in part as the basis for the manufacture or sale of items without written permission.



B-FORK

ASH

ASH.00 (062)
SHIFT COUNT TO DR; CAN'T CHANGE ADDR OR C LINES
$t_1$ BA←DR; BC←BSOPI
$t_2$ SHFR←BR
$t_4$ DR←SHFR
(058)

ASH.10
ASH.10 (058)
LOAD STEP COUNTER WITH SHIFT COUNT
$t_1$ <BA←PCB>
$t_2$ <SHFR←SR>
$t_3$ BEND
SC←DR
(305)

ASH.20 (305)
STEP SC; SET COND CODES É SEE IF NO SHIFT
$t_1$ <BA←DR>
$t_2$ SHFR←SR
$t_3$ BRQ STROBE
SC←SC±1
$t_4$ CCLD&
[ZÉN ACC SHFR; CÉV←0]
BEN@3(217)

SC>0
ASH.40 (257)
ASH.41 (166)
SHIFT LEFT (ZERO INSERTION) CC'S KEPT CURRENT
$t_1$ <BA←PCB>
$t_2$ SHFR←SHL(SR)
$t_3$ BRQ STROBE
SC←SC±1
$t_5$ GR[SF]←SHFR
$t_6$ SR←SHFR
CCLD$
[ZÉN ACC SHFR; C←AMX15 V←$V_{OLD}$+(SHFR15+AMX15)]
BEN@3(126)
SC≠0

SC=0
FET.05 1 (126)

SC<0
ASH.30 (277)
SHIFT RIGHT SIGN EXTENDED; CC'S KEPT CURRENT
$t_1$ <BA←PCB>
$t_2$ SHFR←SHR(SR)
$t_3$ BRQ STROBE
SC←SC±1
$t_5$ GR[SF]←SHFR
$t_6$ SR←SHFR
CCLD$
BEN@3(237)
SC≠0

SC=0
FET.07 1 (237)

SC=0
FET.00 1 (217)

ASHC

ASC.00 (063)
SHIFT COUNT TO DR CAN'T CHANGE ADDR OR C LINES
$t_1$ BA←DR; BC←BSOPI
$t_2$ SHFR←BR
$t_4$ DR←SHFR
(059)

ASC.10
ASC.10 (059)
LOAD STEP COUNTER & READ LO-ORDER OPERAND TO DR
$t_1$ <BA←PCB>
$t_2$ <SHFR←SR>
$t_3$ BEND
SC←DR
$t_4$ DR←GDC SFv1]
(306)

ASC.20 (306)
STEP SC; SET COND CODES É SEE IF NO SHIFT
$t_1$ <BA←DR>
$t_2$ SHFR←SR
$t_3$ BRQ STROBE
SC←SC±1
$t_4$ BR←SHFR
CCLD&
[ZÉN ACC SHFR; CÉV←0]
BEN@3(207)

SC<0
ASC.40 (267)
SHIFT RIGHT; SR←HI; DR=LO; SET COND CODES ON NI
$t_1$ <BA←DR>
$t_2$ SHFR←SHR(SR)
$t_3$ BRQ STROBE
SC←SC±1
$t_5$ GR[SF]←SHFR
$t_6$ SR←SHFR
DR←RIGHT(DR)
[ALU@ INSERTED]
CCLD$
[ZÉN ACC SHFR; C←DR@0 V←0]
BEN@3(227)
SC≠0

SC=0

SC>0
ASC.30 (247)
ASC.31 (176)
SHIFT LEFT; SR←HI; DR=LO; SET COND CODES ON HI
$t_1$ <BA←DR>
$t_2$ SHFR←ALU$(A=SR, B=1) [SHL(SR)+DR15]
$t_3$ BRQ STROBE
SC←SC±1
$t_5$ GR[SF]←SHFR
$t_6$ SR←SHFR
DR←LEFT(DR) (0 INSERTED)
CCLD$
[ZÉN ACC SHFR; C←AMX15; V←$V_{OLD}$+(SHFR15+AMX15)]
BEN@3(136)
SC≠0

SC=0

SC=0
ASC.60 (227)
ASC.61 (136)
SHIFT DONE; SAVE LO ORDER SET COND CODES ON LO; START FETCH NEXT INSTR.
$t_1$ BA←PCB; BC←DAT.I
$t_2$ SHFR←DR
$t_3$ BUST
$t_5$ GR[SF,v1]←SHFR
$t_6$ CCLD6
[N,C,ÉV N/A; Z←$Z_{OLD}$*SHFR=0]
BEN 12(240)

-BRQ
FET.10 1 (260)

BRQ
BRK.90 12 (240)

F/CLASS

FOP.40 (036)
DST ADRS TO BR ENABLE FP ATTN
$t_1$ <BA←DR>
$t_2$ SHFR←DR
$t_3$ BEND
$t_4$ BR←SHFR
FP ATTN
(225)

FSV.20 12

B-FORK 8

SC=0
ASC.80 (207)
NO SHIFT; SET COND CODES ON LO; START FETCH NEXT INSTR.
$t_1$ BA←PCB; BC←DATI
$t_2$ SHFR←DR
$t_3$ BUST
$t_4$ CCLD6
[N,C,ÉV N/A; Z←$Z_{OLD}$* SHFR=0]
BEN 12(240)

ASH & ASC

| FIRST USED ON OPTION/MODEL | QTY. | DESCRIPTION | PART NO. | ITEM NO. |
|---|---|---|---|---|
| 11/45 | | PARTS LIST | | |

UNLESS OTHERWISE SPECIFIED DIMENSION IN INCHES. TOLERANCES
DECIMALS: .XXX = .005, .XX = .02, .X = .1; ANGLES: ±0° 30'
REMOVE BURRS AND BREAK SHARP CORNERS SURFACE QUALITY ✓
MATERIAL
FINISH

| | | |
|---|---|---|
| DRN. | A Kleist | DATE 3/16/72 |
| CHKD. | | DATE 4/11/72 |
| ENG. | | DATE 4/12/72 |
| PROJ. ENG. | | DATE 4/12/72 |
| PROD. | | DATE 4/13/72 |

digital EQUIPMENT CORPORATION MAYNARD MASSACHUSETTS

TITLE: KB11-A FLOW DIAGRAMS (FLOWS 7)

NEXT HIGHER ASSY.: B-DD-KB11-Ø
SCALE
SHEET 8 OF 15
SIZE D | CODE FD | NUMBER KB11-A-03 | REV. A
DIST.

| REV | REVISIONS | CHANGE NO | CHK |
|---|---|---|---|
| A | | | |

BRUNING 40-522 1584D
DEC FORM NO DRD 102-B

This drawing and specifications, herein, are the property of Digital Equipment Corporation and shall not be reproduced or copied or used in whole or in part as the basis for the manufacture or sale of items without written permission.



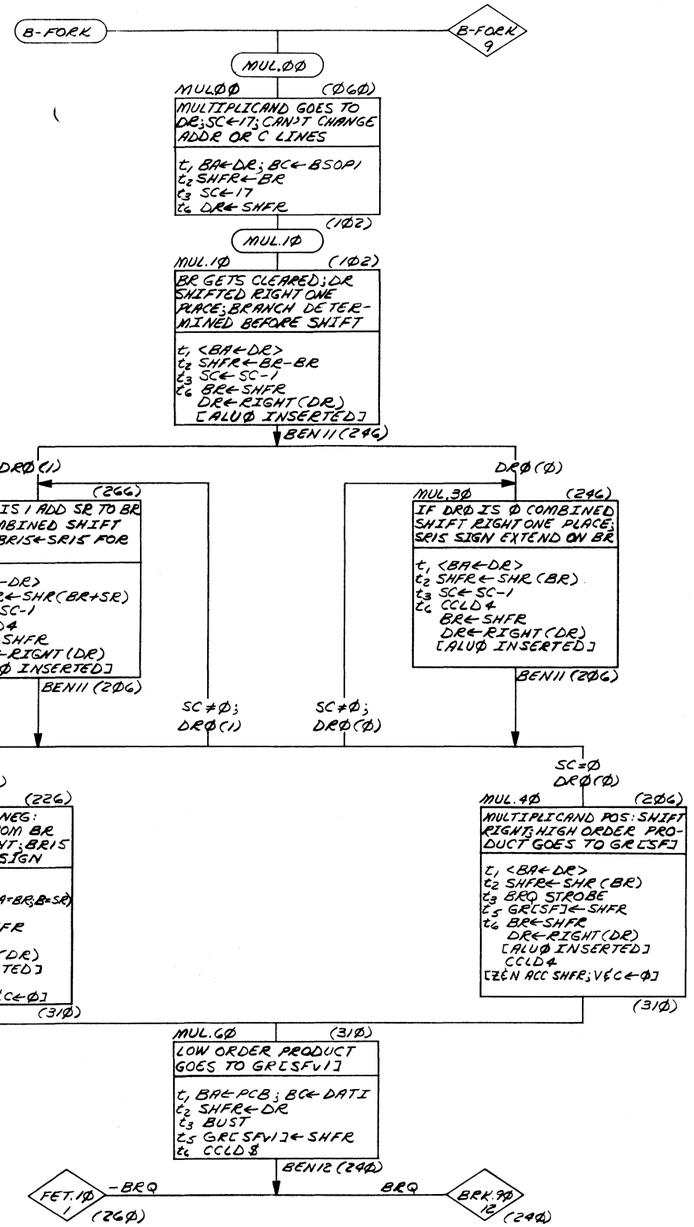


MULTIPLY

| FIRST USED ON OPTION/MODEL | QTY. | DESCRIPTION | PART NO. | ITEM NO. |
|---|---|---|---|---|
| 11/45 | | PARTS LIST | | |

UNLESS OTHERWISE SPECIFIED DIMENSION IN INCHES. TOLERANCES
DECIMALS: XXX = .005, XX = .02, X = .1; ANGLES: ±0° 30'
REMOVE BURRS AND BREAK SHARP CORNERS. SURFACE QUALITY ✓
MATERIAL
FINISH

| | | |
|---|---|---|
| DRN. | Akibat | DATE 3/16/72 |
| CHK'D. | | DATE |
| ENG. | | DATE |
| PROJ. ENG. | | DATE 4-7-72 |
| PROD. | | DATE |

NEXT HIGHER ASSY. B-DD-KB11-Ø
SCALE
SHEET 9 OF 15

digital EQUIPMENT CORPORATION MAYNARD MASSACHUSETTS

TITLE
KB11-A
FLOW DIAGRAM
(FLOW 9)

| SIZE | CODE | NUMBER | REV. |
|---|---|---|---|
| D | FD | KB11-A-Ø3 | A |

DIST

| REV | REVISIONS | CHANGE NO | CHK |
|---|---|---|---|

BRUNING 40-522 15840
DIST. FORM NO. ORD 102-B

This drawing and specifications, herein, are the property of Digital Equipment Corporation and shall not be reproduced or copied or used in whole or in part as the basis for the manufacture or sale of items without written permission.



B-FORK

B-FORK 11

DIV.00

DIV.50 (0061)
DIVISOR GOES TO SR, LOAD CONDITION CODE TO SEE IF IT IS ZERO; HIGH ORDER DIVIDEND GOES TO DR
t1 BA←DR; BC←BSOP1
t2 SHFR←BR
t4 SR←SHFR
DR←GD[SF]
CCLD$
[NEZ ACC SHFR; VEC←0]
(254)

DIV.10 (254)
BRANCH ON DIVISOR 0; LOAD CONDITION CODE TO TEST THE SIGN OF DIVIDEND
t1 <BA←SR>
t2 SHFR←DR
t4 CCLD$
[NEZ ACC SHFR; VEC←0]
BEN@2 (232)

N → DVE.00 (272)
DIVISOR IS ZERO, ABORT DIVIDE; SET C AND V BIT; GO FETCH NEXT INSTRUCTION.
t1 <BA←DR>
t2 <SHFR←SR>
t3 BRQ STROBE
t4 CCLD$
(169)
FET@4 1

-N → DIV.20 (232)
DIVISOR IS NON ZERO; BRANCH ON DIVIDEND NEG; SR HAS DIVISOR, DR HAS HIGH ORDER DIVIDEND
t1 <BA←DR>
t2 <SHFR←SR>
BEN@4 (241)

N → DVN.00 (261)
DIVIDEND IS NEGATIVE, GOT TO MAKE IT POSITIVE. GET LOW ORDER DIVIDEND IN SR; BR HAS DIVISOR SAVED
t1 <BA←DR>
t2 <SHFR←SR>
t3 CLEAR DR
t4 SR←GS[SFV1]
(1004)
(1004)

DVN.10
FIND TWO'S COMPLEMENT OF LOW ORDER AND WRITE IT BACK; DR IS 0
t1 <BA←DR>
t2 SHFR←DR-SR
t3 GR[SFV1]←SHFR
(1005)
(1005)

DVN.20
TEST IF THERE WAS A CARRY OUT OF THE LOW ORDER DIVIDEND; PUT IT IN DR
t1 <BA←DR>
t2 SHFR←DR-SR
t4 DR←LEFT(DR)
[ALU CARRY INSERTED]
(1006)

DVN.30

-N → DVP.00

DVN.30 (1006)
MAKE DR 0 IF THERE WAS A CARRY OR A -1 IF NOT; SET THE HIGH ORDER DIVIDEND TO SR
t1 <BA←DR>
t2 SHFR←DR-1
t4 SR←GS[SF]
DR←SHFR
(0055)
(0055)

DVN.40
FIND TWO'S COMPLEMENT OF HIGH ORDER DIVIDEND IF THERE WAS A CARRY FROM LOW ORDER, ELSE ONE'S COMPLE WRITE IT BACK; LOAD COND CODES
t1 <BA←DR>
t2 SHFR←DR-SR
t3 GR[SF]←SHFR
t4 DR←SHFR
CCLD$
[NEZ ACC SHFR; VEC←0]
(005G)
(005G)

DVN.50
SR GETS DIVISOR; BRANCH ON SIGN OF DIVIDEND
t1 <BA←DR>
t2 SHFR←BR
t4 SR←SHFR
BEN@4 (243)

N → DVE.10 (263)
THE TWO'S COMPLEMENT OF A NEGATIVE NUMBER IS STILL NEGATIVE; MUST BE MOST NEG. NO. ABORT DIVIDE; SET V & C BITS
t1 <BA←DR>
t2 <SHFR←BR>
t4 CCLD$
(195)
DVE.20 9

-N → DVN.60 (243)
HIGH ORDER DIVIDEND GOES TO BR; SR HAS DIVISOR
t1 <BA←DR>
t2 SHFR←DR
t4 BR←SHFR
(107)
(107)

DVN.70
DR GETS LOW ORDER DIVIDEND; SC GETS THE COUNT; SET N TO SHOW DIVIDEND WAS NEG
t1 <BA←DR>
t2 SHFR←-DR
t3 SC←17
t4 DR←GD[SFV1]
CCLD$
[NEZ ACC SHFR; VEC←0]
(197)
DIV.30 9

DVP.00

DVP.00 (241)
DIVIDEND IS POSITIVE; BR GETS THE HIGH ORDER DIVIDEND; SR HAS DIVISOR
t1 <BA←SR>
t2 SHFR←DR
t4 BR←SHFR
(103)
(103)

DVP.10
DR GETS THE LOW ORDER DIVIDEND; SC GETS THE COUNT
t1 <BA←SR>
t2 <SHFR←DR>
t3 SC←17
t4 DR←GD[SFV1]
(147)

LIV.30

DIV.30 (147)
START FIRST DIVISION, SHIFT BR LEFT & INSERT DR15; SET Z BIT
t1 <BA←DR>
t2 SHFR←ALU$[A=BR, B=1]
t4 BR←SHFR
CCLD$
[NEN, C, V, & Z←1]
BENIG (346)

SR15 (0)

DIV.40 (346)
DIVISOR POSITIVE DO H SUBTRACTION TO FIND BITS OF QUOTIENT
t1 <BA←DR>
t2 SHFR←BR-SR
t3 SC←SC-1
t4 BR←SHFR
DR←LEFT(DR)
[ALU CARRY INSERTED]
CCLD6
[Z←ZOLD*SHFR=0]
(313)

SR15 (1)

DIV.50 (346)
DIVISOR IS NEGATIVE. DO AN ADDITION. TO FIND BITS OF QUOTIENT
t1 <BA←DR>
t2 SHFR←BR+SR
t3 SC←SC-1
t4 BR←SHFR
DR←LEFT(DR)
[ALU CARRY INSERTED]
CCLD6
[Z←ZOLD*SHFR=0]
(313)

DIV.60 (313)
CONTINUE DIVIDE IF QUOTIENT WILL BE POS. BUT ALLOW FOR MOST NEG. NO. IF QUOT. IS TO BE NEG.
t1 <BA←DR>
t2 <SHFR←BR>
BEN@5 (145)

DIV QUIT

DVE.20 (145)
DIVISION OVERFLOW; RESULTS WON'T FIT IN 16 BITS; V BIT IS SET; GO FETCH NEXT INSTR.
t1 <BA←SR>
t2 SHFR←DR
t3 BRQ STROBE
t4 CCLD7
[C←ALU CARRY]
(164)
FET@4 1

-DIV QUIT

DIV.70 (165)
FINISH DIVISION; SHIFT BR LEFT & INSERT DR15; DR IS FORMING QUOTIENT & BR REMAINDER
t1 <BA←DR>
t2 SHFR←ALU$[A=BR, B=1]
t4 BR←SHFR
BEN@4 (323)

DIV SUB

DIV.80 (323)
SIGNS OF DIVISOR & PART. REMAINDER ARE SAME SUBTRACT; DR0 IS -SIGN OF REMAINDER
t1 <BA←DR>
t2 SHFR←BR-SR
t3 SC←SC-1
t4 BR←SHFR
DR←LEFT(DR)
[ALU CARRY INSERTED]
BEN@3 (125)

-DIV SUB

DIV.90 (343)
SIGNS OF DIVISOR & PARTIAL REMAINDER ARE DIFFERENT ADD; DR0 IS -SIGN OF REMAINDER
t1 <BA←DR>
t2 SHFR←BR+SR
t3 SC←SC-1
t4 BR←SHFR
DR←LEFT(DR)
[ALU CARRY INSERTED]
BEN@3 (125)

SC≠0

SC=0

DVC.00 10 (125)

DIVIDE

| FIRST USED ON OPTION/MODEL | QTY. | DESCRIPTION | PART NO. | ITEM NO. |
|---|---|---|---|---|
| 11/45 | | PARTS LIST | | |

UNLESS OTHERWISE SPECIFIED DIMENSION IN INCHES. TOLERANCES
DECIMALS: .XXX = .005, .XX = .02, .X = .1; ANGLES: ±0° 30'
REMOVE BURRS AND BREAK SHARP CORNERS SURFACE QUALITY ✓
MATERIAL: #
FINISH: —

DRN. [illegible] DATE 3/17/72
CHK'D [illegible] DATE 4/11/72
ENG. [illegible] DATE 4-3-72
PROJ. ENG. [illegible] DATE 4-3-72
PROD. [illegible] DATE 4-5-72

NEXT HIGHER ASSY. B-DD-KB11-0
SCALE —
SHEET 10 OF 15

digital EQUIPMENT CORPORATION MAYNARD MASSACHUSETTS

TITLE: KB11-A FLOW DIAGRAMS (FLOWS 9)

| SIZE | CODE | NUMBER | REV |
|---|---|---|---|
| D | FD | KB11-A-03 | A |

DIST.

BRUNING 40-522 15840
REVISIONS | REV | CHANGE NO | CHK
DEC FORM NO DRD 102-B

This drawing and specifications, herein, are the property of Digital Equipment Corporation and shall not be reproduced or copied or used in whole or in part as the basis for the manufacture or sale of items without written permission.

DVC.ØØ

DVC.ØØ (125)
DIVIDE COMPLETE WRITE REMAINDER INTO GR[SFV] MAY BE MODIFIED LATER
t1 <BA←DR>
t2 SHFR←BR
t5 GR[SFV]←SHFR

BENIG(216)

DRØ(1) * SR15(Ø)
DVC. 3Ø (256)
LAST DIVISION WENT; MAGNITUDE OF REMAINDER CORRECT; DO ONE'S COMPLEMENT IN CASE DIVIDEND STARTED NEG.
t1 <BA←DR>
t2 SHFR←-BR
t6 BR←SHFR

DRØ(Ø) * SR15(Ø)
DVC. 1Ø (216)
LAST DIVISION DIDN'T GO; CORRECT REMAINDER BY ADDING DIVISOR & WRITE IT AWAY
t1 <BA←DR>
t2 SHFR←BR+SR
t5 GR[SFV]←SHFR
t6 BR←SHFR
(256)

DRØ(Ø) * SR15(1)
DVC. 2Ø (236)
LAST DIVISION DIDN'T GO; ADD ABSOLUTE VALUE OF NEG. DIVISOR TO REMAINDER & WRITE IT AWAY
t1 <BA←DR>
t2 SHFR←BR-SR
t5 GR[SFV]←SHFR
t6 BR←SHFR
(276)

DRØ(1) * SR15(1)
DVC. 4Ø (276)
LAST DIVISION WENT BUT DIVISOR IS NEG.; MAGNITUDE OF REMAINDER CORRECT; DO ONE COMPLEMENT IN CASE DIVIDEND STARTED NEG.
t1 <BA←DR>
t2 SHFR←-BR
t6 BR←SHFR

BENØ4(356)

-N
DVC. 7Ø
DVC. 7Ø (356)
DIVIDEND STARTED POS. DON'T CHANGE REMAINDER IN[SFV]; STORE QUOTIENT IN [SF] & RECORD ITS COND. CODES
t1 <BA←DR>
t2 SHFR←DR
t3 BRQ STROBE
t5 GR[SF]←SHFR
t6 CCLD4
[N≠Z ACC SHFR; VEC←Ø]
(164)

FET.Ø4 1

N
DVC. 5Ø (376)
DIVIDEND STARTED NEG. FIND TWO'S COMPLEMENT OF REMAINDER & WRITE IT AWAY
t1 <BA←DR>
t2 SHFR←BR+1
t5 GR[SFV]←SHFR
(351)

BENØ4(351)

-N
DVC. 8Ø (351)
DIVIDEND AND DIVISOR HAD DIFFERENT SIGNS; FIND ONE'S COMPLEMENT OF QUOTIENT
t1 <BA←DR>
t2 SHFR←-DR
t6 DR←SHFR
SR←GS[SF]
CCLD4
[N≠Z ACC SHFR; VEC←Ø]
(220)

N
DVC. 6Ø (371)
DIVIDEND STARTED NEG. FIND TWO'S COMPLEMENT OF REMAINDER & WRITE IT AWAY
t1 <BA←DR>
t2 SHFR←BR+1
t5 GR[SFV]←SHFR
(356)

DVC.7Ø 1Ø

DVC. 9Ø (220)
FORM TWO'S COMPLEMENT OF QUOTIENT & WRITE IT AWAY; RECORD IT'S COND. CODES
t1 <BA←DR>
t2 SHFR←DR+1
t3 BRQ STROBE
t5 GR[SF]←SHFR
t6 CCLD4
[N≠Z ACC SHFR; VEC←Ø]

BENØ4(144)

-N
DVDRØ (144)
TEST FOR QUOTIENT BEING THE MOST NEGATIVE NUMBER
t1 <BA←DR>
t4 <SHFR←SR>

BENØ4(353)

-N
DVD.1Ø (353)
QUOTIENT CAME OUT TO BE POSITIVE AFTER TWO'S COMPLEMENT; SET V BIT TO INDICATE OVERFLOW
t1 <BA←DR>
t2 <SHFR←SR>
t4 CCLD5
(195)

DVE.2Ø 9

N
FET.Ø4 1 (164)

N
FET.Ø6 1 (373)

DIVIDE

| FIRST USED ON OPTION/MODEL | QTY. | DESCRIPTION | PART NO. | ITEM NO. |
|---|---|---|---|---|
| 11/45 | | PARTS LIST | | |

UNLESS OTHERWISE SPECIFIED DIMENSION IN INCHES. TOLERANCES
DECIMALS: .XXX = .005, .XX = .02, .X = .1 — ANGLES: ±0° 30'
REMOVE BURRS AND BREAK SHARP CORNERS SURFACE QUALITY ✓
MATERIAL
FINISH

DRN. Akbert DATE 3/23/72
CHK'D DATE 7/12/72
ENG. DATE 4 7 72
PROJ. ENG. DATE 4 3 72
PROD. DATE 11 5 72
NEXT HIGHER ASSY. B-DD-KBII-Ø
SCALE
SHEET 11 OF 15

digital EQUIPMENT CORPORATION MAYNARD MASSACHUSETTS

TITLE KBII-A FLOW DIAGRAMS (FLOWS 1Ø)

SIZE D | CODE FD | NUMBER KBII-A-Ø3 | REV. A
DIST.

| REVISIONS | REV. |
|---|---|
| CHANGE NO | |
| CHK | |

BRUNING 40 522 15840
DEC FORM NO DRD 102-B

SIZE D | CODE FD | NUMBER KBII-A-Ø3 | REV A

This drawing and specifications, herein, are the property of Digital Equipment Corporation and shall not be reproduced or copied or used in whole or in part as the basis for the manufacture or sale of items without written permission.



Ø-FORK

NEG.B

NEG.ØØ (Ø67)
COMPLEMENT DST OPERAND; CANT CHANGE ADDR OR C LINES UNTIL OPERATION COMPLETED
t1 BA←DR; BC←BSOP1
t2 SHFR←$ALU(A=BR; B=1)
t6 BR←SHFR
(271)

NEG.1Ø (271)
AND THEN INCREMENT SET CC'S SEE IF DST IS ODD BYTE
t1 BA←DR; BC←BSOP1
t2 SHFR←BR+1
t6 CCLD $
BR←SHFR

BEN Ø 5 (123)
DRØ (1)
DRØ (Ø)

NEG.2Ø (163)
EVEN BYTE OR WORD—OUTPUT RESULTS; CHECK STACK LIMIT
t1 BA←DR; BC←BSOP2
t2 <SHFR←BR>
t3 BUST; GO CDF]
(132)

[ASRB + RORB] * DRØ (1)

SHR.ØØ (Ø64)
SHIFT OR ROTATE RIGHT ODD BYTE; SET CCS
t1 BA←DR; BC←BSOP1
t2 SHFR←$ALU(A=BR; B=1)
t6 CCLD $
BR←SHFR
(123)

SHR.1Ø (123)
ODD BYTE—HI. ORDER BYTE POSITIONED & OUTPUT CHECK STACK LIMIT
t1 BA←DR; BC←BSOP2
t2 SHFR←SWAP(BR)
t3 BUST; GO [DF]
t6 BR←SHFR
(132)

A/CLASS * - [(ASRB + RORB) * DRØ(1) + NEG.B] * - [TST.B + BIT.B + CMP.B] * - FAST

EXC.Ø1 (Ø31)
DO THE OPERATION; START BUS OPERATION KNOWING THAT IT'S NOT QUITE RIGHT
t1 BA←DR; BC←BSOP1
t2 SHFR←$ALU(A=BR; B=SR)
t3 BUST; GO CØ]
t6 CCLD $
BR←SHFR
(132)

[TST.B + BIT.B + CMP.B] * - FAST

TST.ØØ (Ø32)
NO MORE BUS OPS NEEDED BUT CAN'T CHANGE ADDR OR C LINES
t1 BA←DR; BC←BSOP1
t2 SHFR←$ALU(A=BR; B=SR)
t3 BRQ STROBE
t6 CCLD $
(217)

FET.ØØ 1

[TST.B + BIT.B + CMP.B] * FAST

TST.1Ø (Ø33)
NO MORE BUS OPS; SET CC'S & START FETCH NEXT INSTR
t1 BA←PCB; BC←DATI
t2 SHFR←$ALU(A=BR; B=SR)
t3 BUST; GO[DF]
t6 CCLD $

BEN 12 (24Ø)
-BRQ
FET.1Ø 1 (26Ø)
BRQ
BRK.9Ø 12 (24Ø)

JMP

JMP.ØØ (Ø35)
LOAD NEW PC FROM DST ADRS
t1 <BA←DR7
t2 <SHFR←PCB7
t3 BEND
BRQ STROBE
t5 PCA←DR
t6 PCB←PCA
(217)

FET.ØØ 1

USR

USR.ØØ (Ø34)
SAVE DST ADRS IN PCA; GET MODIFIED SRC FIELD REG TO SR
t1 <BA←DR7
t2 SHFR←PCB
t3 BEND
t5 PCA←DR
t6 -SF7: SR←GS[SF]
SF7: SR←SHFR
(201)

USR.1Ø (201)
GET SP AND PUT SRC FIELD REG IN BR FOR PUSHING OLD CONTENTS ON STACK
t1 (BA←PCB)
t2 SHFR←SR
t3 BRQ STROBE
t6 DR←GD[6]
BR←SHFR
(274)

USR.2Ø (274)
STEP SP BACK FOR PUSH
t1 <BA←DR7
t2 SHFR←DR-2
t5 GR[6]←SHFR
t6 DR←SHFR
(275)

USR.3Ø (275)
WRITE OLD SRC FIELD REG ON STACK, OLD PC IN SRC FIELD REG, AND DST ADRS IN AC; CHECK STACK LIMIT
t1 BA←DR; BC←DATO
t2 SHFR←PCB
t3 BUST; STACK REF
t5 GR[SF]←SHFR
t6 PCB←PCA
(3ØØ)

SVC.9Ø 13

MFP

MFP.ØØ (Ø66)
PREVIOUS MODE DATA IN BR; GET CURRENT MODE SP; SET CC'S.
t1 BA←DR; BC←BSOP1
t2 SHFR←BR
t6 CCLD $
SR←GS[6]
(25Ø)

MFP.1Ø (25Ø)
STEP STACK POINTER BACK FOR PUSH
t1 <BA←DR7
t2 SHFR←SR-2
t3 BEND
t5 GR[6]←SHFR
t6 DR←SHFR
(222)

SVC.8Ø 13

INFP.9Ø

MFR.BØ (Ø46)
PREVIOUS MODE DATA IN GR'S; IF R6 USE PREV MODE SP; R0-R5 SET DETERMINED BY REG. SET BIT (PS//)
t1 <BA←PCB7
t2 SHFR←PCB
t3 BEND
t5 -IR.CLASS:GR[IR]←SHFR
t6 -DF7:DR←GD[DF]
DF7:DR←SHFR
(3Ø4)

MFR.9Ø (3Ø4)
PUT DATA IN BR & SET CC'S; GET CURRENT MODE SP
t1 <BA←DR7
t2 SHFR←DR
t6 CCLD $
BR←SHFR
SR←GS[6]
(25Ø)

EXECJØ (132)
FINISH BUS OPERATION
t1 BA←DR; BC←BSOP2
t2 <SHFR←BR>
t3 BRQ STROBE
t5 BUS LONG PAUSE
(217)

FET.ØØ 1

EXECUTE – MEM REF

| FIRST USED ON OPTION/MODEL | QTY. | DESCRIPTION | PART NO. | ITEM NO |
|---|---|---|---|---|
| 11/45 | | PARTS LIST | | |

UNLESS OTHERWISE SPECIFIED DIMENSION IN INCHES. TOLERANCES
DECIMALS: .XXX = .005, .XX = .02, .X = .1 | ANGLES: ±0° 30'
REMOVE BURRS AND BREAK SHARP CORNERS SURFACE QUALITY ✓
MATERIAL —
FINISH —

| | | |
|---|---|---|
| DRN. M. Perrin | DATE 3/8/72 | digital EQUIPMENT CORPORATION MAYNARD MASSACHUSETTS |
| CHK'D | DATE | |
| ENG. | DATE 4-3-72 | |
| PROJ. ENG. | DATE 4-3-72 | |
| PROD. | DATE 4-13-72 | |

TITLE: KB11-A FLOW DIAGRAMS (FLOWS 11)
NEXT HIGHER ASSY.: B-DD-KB11-Ø
SCALE —
SHEET 12 OF 15
SIZE D | CODE FD | NUMBER KB11-A-03 | REV A
DIST.

REVISIONS: REV | CHANGE NO | CHK

BRUNING 40-522 15840
DIT. FORM NO DRD 102-B

This drawing and specifications, herein, are the property of Digital Equipment Corporation and shall not be reproduced or copied or used in whole or in part as the basis for the manufacture or sale of items without written permission.



ZAP.ØØ

ZAP.ØØ (2ØØ)
ABORTED OPERATION OR POWER ON SEQUENCE
t1 <BA←PCB>
t2 <SHFR←DR>
t3 BEND
BRQ STROBE

BENØ6 (352)
-PS RESTORE

PS RESTORE
ZAR.1Ø (372)
ABORT CAME FROM SERVICE FLOWS; FIX UP PC & PS; PCB GETS OLD PS; DR HAS ABORTED ADDR
t1 <BA←DR>
t2 <SHFR←PCB>
t4 PCB←PCA
(315)

ZAR.2Ø (315)
RESTORE OLD PC; BR GETS OLD PS
t1 <BA←DR>
t2 SHFR←PCB
t5 PCA←SR
t6 BR←SHFR
PCB←PCA
(3Ø2)

ZAR.3Ø (3Ø2)
RESTORE OLD PS
t1 <BA←DR>
t2 <SHFR←PCB>
t5 PS←BR
(154)

BRK.ØØ 12

BRK.7Ø

BRK.9Ø (24Ø)
ERQ TO BE SERVICED; END LAST OPERATION
t1 <BA←PCB>
t2 <SHFR←DR>
t3 BEND
(154)

BRK.ØØ

BRK.ØØ (154)
BRK.Ø1 (352)
WAIT FOR INTR IF BUS REQ ACTIVE & GET VECTOR
t1 <BA←PCB>
t2 SHFR←PCB
INTR PAUSE
t6 BR←BUS
SR←SHFR

BEN12 (13Ø)
-CONF

CONF
CONØØ 14 (17Ø)

BRK.1Ø

BRK.1Ø (13Ø)
BRK.11 (253)
INTR VECTOR TO DR; SR HOLDS PC
t1 <BA←PCB>
t2 SHFR←BR
t6 DR←SHFR
BEN13 (1ØØ)

RSD.ØØ

RSD.ØØ (ØØØ)
RSD.Ø1 (Ø17)
RSD.Ø2 (Ø42)
DR GETS VECTOR ADDR; PS TO BR
t1 <BA←PCB>
t2 SHFR←TV
t3 BEND
t6 DR←SHFR
BR←PS
(345)

RSD.1Ø (345)
LEFT SHIFT VECTOR ADDR TO CORRECT & RE-STORE IN DR
t1 <BA←DR>
t2 SHFR←SHL(DR)
t6 DR←SHFR
(354)

TRP.ØØ

TRP.ØØ (Ø13)
TRP.Ø1 (Ø14)
TRP.Ø2 (124)
VECTOR ADRS IN DR; PS IN BR
t1 <BA←PCB>
t2 SHFR←TV
t3 BEND
t6 DR←SHFR
BR←PS
(354)

TRP.1Ø (354)
PCA GETS OLD PS; FETCH NEW PC FROM VECTOR
t1 BA←DR; BC←KERN DATI
t2 <SHFR←BR>
t3 BUST; GRC←Ø]
t5 PCA←BR
(355)

SVCØØ 13

FSV.2Ø

FSV.2Ø (225)
SEND FP ATTN & WAIT UNTIL FPU READY
t1 <BA←EMLU>
t2 <SHFR←P-E>
t3 BRQ STROBE

BEN1Ø (2Ø5)
-FP SYNC

-(FP REQ * FP SYNC)
FETØ9 1 (265)

FP REQ * FP SYNC

FSV.ØØ (245)
DO BUS OP FOR FPU; FOR DATO BR GETS GOOD DATA FROM FPU TO OUTPUT
t1 BA←DR; BC←FC
FP READ
t2 <SHF←PCB>
t3 BUST; GDC←Ø]
t6 BR←BUS
(15Ø)

FSV.1Ø (15Ø)
FINISH BUS OP & STEP DR; FOR DATI BR GETS DST OPERAND FOR FPU; ENABLE FP ATTN
t1 BA←DR; BC←FC
t2 SHFR←DR+2
t5 BUS LONG PAUSE
t6 FP ATTN
DR←SHFR
BR←BUS
(225)

POWER UP [PF(1)]

PUP.ØØ (1ØØ)
START VECTOR ADRS TO DR
t1 <BA←PCB>
t2 SHFR←SV
t3 ACKN
t6 DR←SHFR
(347)

PUP.1Ø (347)
FETCH NEW PC FROM SV
t1 BA←DR; BC←DATI
t2 <SHFR←SV>
t3 BUST; GRC←Ø]
(333)

PUP.2Ø (333)
GET NEW PC & STEP TO NEXT WORD OF VECTOR
t1 BA←DR; BC←DATI
t2 SHFR←DR+2
t5 BUS LONG PAUSE
t6 SR←SHFR
BR←BUS
(34Ø)

PUP.3Ø (34Ø)
FETCH NEW PS; PC IN BR GOES TO PCB
t1 BA←SR; BC←DATI
t2 <SHFR←BR>
t3 BUST; GRC←Ø]
t5 PCA←BR
t6 PCB←PCA
(341)

PUP.4Ø (341)
GET NEW PS FROM SV+2
t1 BA←SR; BC←DATI
t2 <SHFR←PCB>
t5 BUS LONG PAUSE
t6 BR←BUS
(215)

RTI5Ø 2

INTERNAL TRAPS EXCEPT RED STACK ERRORS [PF(Ø)*TF*-SF]

BRK.8Ø

BRK.8Ø (14Ø)
GET TRAP VECTOR ADRS TO DR & PROCESSOR STATUS (PS) TO BR
t1 <BA←PCB>
t2 SHFR←TV
t6 BR←PS
DR←SHFR
(152)

INTERRUPTS, PASSIVE RELEASE & CONSOLE CONTINUE [PF(Ø)*-TF*-SF]

BRK.2Ø (12Ø)
GET PROCESSOR STATUS TO BR; DR HAS INTERRUPT VECTOR
t1 <BA←PCB>
t2 <SHFR←DR>
t3 ACKN
t6 BR←PS

BENØ2 (152)

(PWRF+INTRF)

BRK.3Ø (152)
FETCH NEW PC FROM VECTOR; PCA GETS OLD PS; ADDR MAPPED TO KERNEL SPACE
t1 BA←DR; BC←KERN DATI
t2 <SHFR←BR>
t3 BUST; GRC←Ø]
ACKN
t5 PCA←BR
(355)

SVCØØ 13

-(PWRF+INTRF)

RTIGØ 2 (172)

RED STACK ERRORS [PF(Ø)*SF]

SER.ØØ (16Ø)
EMERGENCY STACK LOCS Ø & 2 WILL HAVE OLD PC & OLD PS AFTER SERVICE
t1 <BA←PCB>
t2 SHFR←2
t6 SR←SHFR
(344)

SER.1Ø (344)
STACK POINTER SET TO 4 FOR EMERGENCY STACK PUSHES
t1 <BA←PCB>
t2 SHFR←SR+2
t5 GR[6]←SHFR
(14Ø)

BRK.8Ø 12

BREAK CONDITIONS

| FIRST USED ON OPTION/MODEL | QTY. | DESCRIPTION | PART NO. | ITEM NO. |
|---|---|---|---|---|
| 11/45 | | PARTS LIST | | |

UNLESS OTHERWISE SPECIFIED DIMENSION IN INCHES. TOLERANCES
DECIMALS: XXX = .005, .XX = .02, X = .1; ANGLES: ±0° 30'
REMOVE BURRS AND BREAK SHARP CORNERS SURFACE QUALITY ✓
MATERIAL
FINISH

DRN. Wishart DATE 9/6/76
CHK'D. DATE
ENG. DATE
PROJ. ENG. DATE
PROD. DATE
NEXT HIGHER ASSY. B-DD-KB11-Ø
SCALE
SHEET 13 OF 15

digital EQUIPMENT CORPORATION MAYNARD MASSACHUSETTS

TITLE KB11-A FLOW DIAGRAMS (FLOWS 12)

| SIZE | CODE | NUMBER | REV. |
|---|---|---|---|
| D | FD | KB11-A-Ø3 | A |

DIST.

| REV | REVISIONS | CHK |
|---|---|---|
| | CHANGE NO | |

BRUNING 40-522 15840
DEC FORM NO DRD 102-B

This drawing and specifications, herein, are the property of Digital Equipment Corporation and shall not be reproduced or copied or used in whole or in part as the basis for the manufacture or sale of items without written permission.

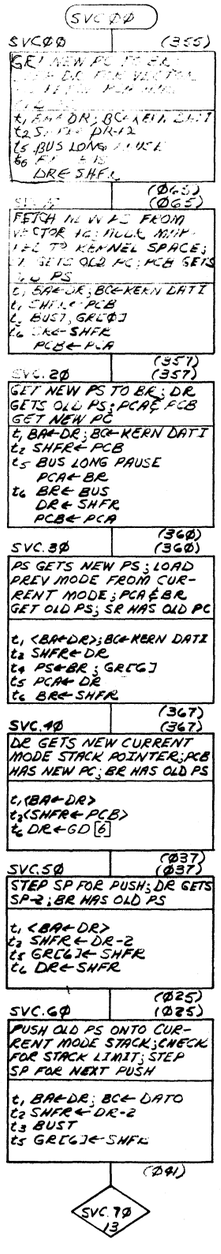


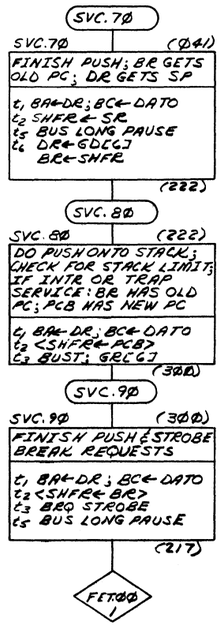


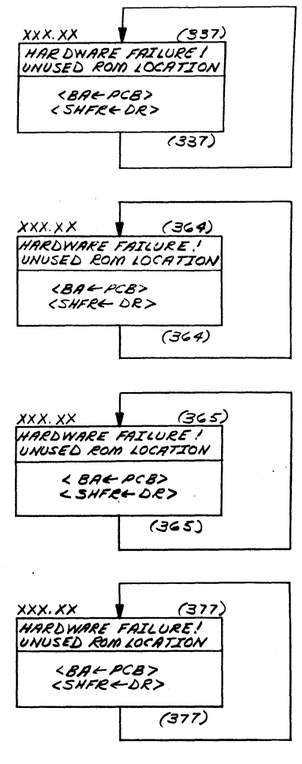


SERVICE SEQUENCE

| FIRST USED ON OPTION/MODEL | QTY. | DESCRIPTION | PART NO. | ITEM NO. |
|---|---|---|---|---|
| 11/45 | | PARTS LIST | | |

UNLESS OTHERWISE SPECIFIED DIMENSION IN INCHES. TOLERANCES
DECIMALS: .XXX = .005, .XX = .02, .X = .1; ANGLES: ±0° 30'
REMOVE BURRS AND BREAK SHARP CORNERS SURFACE QUALITY ✓
MATERIAL
FINISH

| | | |
|---|---|---|
| DRN. | DATE | 3/14/72 |
| CHK'D. | DATE | 4/1/72 |
| ENG. | DATE | 4-3-72 |
| PROJ. ENG. | DATE | 4-3-72 |
| PROD. | DATE | 4/3/72 |

NEXT HIGHER ASSY. F-DD-KB11-0
SCALE
SHEET 14 OF 15

digital EQUIPMENT CORPORATION MAYNARD MASSACHUSETTS

TITLE: KB11-A FLOW DIAGRAMS (FLOWS 13)

| SIZE | CODE | NUMBER | REV. |
|---|---|---|---|
| D | FD | KB11-A-03 | A |

DIST.

REVISIONS: REV | CHANGE NO | CHK

BRUNING 40-522 15840
DEC FORM NO DRD 102-B

REV A
SIZE CODE D FD NUMBER KB11-A-03 REV A

This drawing and specifications, herein, are the property of Digital Equipment Corporation and shall not be reproduced or copied or used in whole or in part as the basis for the manufacture or sale of items without written permission.



CON.ØØ
CON.Ø1 (17Ø) (167)
DISPLAY ADDRESS & DATA; PUT SWITCHES INTO BR
t1 BA←SR
t2 SHFR←DR
t4 BR←SW
BEN1# (Ø7Ø)

EXAM STEP
EXM.ØØ (Ø71)
STEP THE ADDRESS
t1 <BA←SR>
t2 SHFR←SR+2
t4 SR←SHFR
(Ø7Ø)
EXM.1Ø (Ø7Ø)
START BUS OPERATION; ASSERT BUS BUSY
t1 BA←SR; BC←DATI
t3 BUST; GDC←Ø
(153)
EXM.2Ø (153)
FINISH OPERATION; TURN MEMORY ON & WAIT FOR REPLY; BR GETS DATA
t1 BA←SR; BC←DATI
t5 BUS LONG PAUSE
t6 BR←BUS
(134)
EXM.3Ø (134)
PUT DATA IN DR FOR DISPLAY
t1 <BA←SR>
t2 SHFR←BR
t4 DR←SHFR
(23Ø)

EXAM

REG EXAM
RAD.ØØ (Ø72)
LOAD REG ADDR. IN IR'S DEST. MODE FIELD
t1 <BA←SR>
t2 SHFR←SR
t4 IR←SHFR
(314) (314)
RAD.1Ø
PUT REG. CONTENTS IN DR FOR DISPLAY
t1 <BA←SR>
t2 SHFR←PCB
t4 -DF7: DR←GDC[DF]
DF7: DR←SHFR
(23Ø)

DEPOSIT

DEP STEP
DEP.ØØ (Ø74)
STEP THE ADDRESS
t1 <BA←SR>
t2 SHFR←SR+2
t4 SR←SHFR
(Ø73) (Ø73)
DEP.1Ø
OUTPUT DATA IN BR; ASSERT BUS BUSY
t1 BA←SR; BC←DATO
t2 <SHFR←BR>
t3 BUST; GDC←Ø1
(3Ø3) (3Ø3)
DEP.2Ø
FINISH OPERATION; TURN MEMORY ON & WAIT FOR REPLY; DR GETS DATA FOR DISPLAY
t1 BA←SR; BC←DATO
t2 SHFR←BR
t5 BUS LONG PAUSE
t6 DR←SHFR
(23Ø)

REG DEP
RDP.ØØ (Ø75)
LOAD REG. ADDR. IN IR'S DEST. MODE FIELD
t1 <BA←SR>
t2 SHFR←SR
t4 IR←SHFR
(3Ø7) (3Ø7)
RDP.1Ø
WRITE THE REGISTER; DR GETS DATA FOR DISPLAY
t1 <BA←SR>
t2 SHFR←BR
t5 GRLDF 1←SHFR PCA←BR
t6 DR←SHFR
DF7: PCB←PCA
(23Ø)

START
KST.ØØ (Ø76)
PCB GETS PC; GO DO RESET; ACKN FLAGS
t1 <BA←SR>
t2 <SHFR←DR>
t3 ACKN
t4 PCB←PCA
(Ø15)
REG.ØØ 3

CONT
CON.1Ø (Ø77)
DISPLAY PC OF NEXT FETCH
t1 <BA←PCB>
t2 <SHFR←DR>
(13Ø)
BRK.1Ø 12

LOAD ADRS
ALR.ØØ (27Ø)
SR & PCA GET SWITCHES; CLR DR FOR Ø IN DATA LIGHTS
t1 <BA←SR>
t2 SHFR←BR
t3 CLEAR DR
t5 PCA←BR
t6 SR←SHFR
(23Ø)

NO FUNCTION
CON.ØØ 19

CON.2Ø (23Ø)
ACKNOWLEDGE FUNCTION SWITCH
t1 <BA←SR>
t2 <SHFR←DR>
t4 CONS ACKN
(17Ø)
CON.ØØ 18

| REVISIONS | REV | CHANGE NO. | CHK |
|---|---|---|---|

BRUNING 40-522 15840
DEC FORM NO. DRD 102-B

CONSOLE

| FIRST USED ON OPTION/MODEL | QTY. | DESCRIPTION | PART NO. | ITEM NO. |
|---|---|---|---|---|
| 11/45 | PARTS LIST | | | |

UNLESS OTHERWISE SPECIFIED DIMENSION IN INCHES. TOLERANCES
DECIMALS: .XXX = .005, .XX = .02, .X = .1 — ANGLES: ±0° 30'
REMOVE BURRS AND BREAK SHARP CORNERS SURFACE QUALITY ✓
MATERIAL
FINISH

DRN. [illegible] DATE 3/21/72
CHK'D. [illegible] DATE 3/21/72
ENG. [illegible] DATE 4-3-72
PROJ. ENG. [illegible] DATE 4-3-72
PROD. [illegible] DATE 4-15-72
NEXT HIGHER ASSY. B-DD-KB11-Ø
SCALE
SHEET 15 OF 15

digital EQUIPMENT CORPORATION MAYNARD MASSACHUSETTS

TITLE
KB11-A
FLOW DIAGRAMS
(FLOWS 14)

SIZE D | CODE FD | NUMBER KB11-A-03 | REV. A
DIST

This drawing and specifications, herein, are the property of Digital Equipment Corporation and shall not be reproduced or copied or used in whole or in part as the basis for the manufacture or sale of items without written permission.

NOTES:
1. UNLESS OTHERWISE NOTED RESISTANCE IS IN Ω AND CAPACITANCE IS IN PICOFARADS. CAPS WITHOUT VALUE NOTED ARE .01 MFD.
2. E9, E10, E26 & E79 ARE SPARE IC LOCATIONS
3. R1, R3 & R13 ARE NOT USED

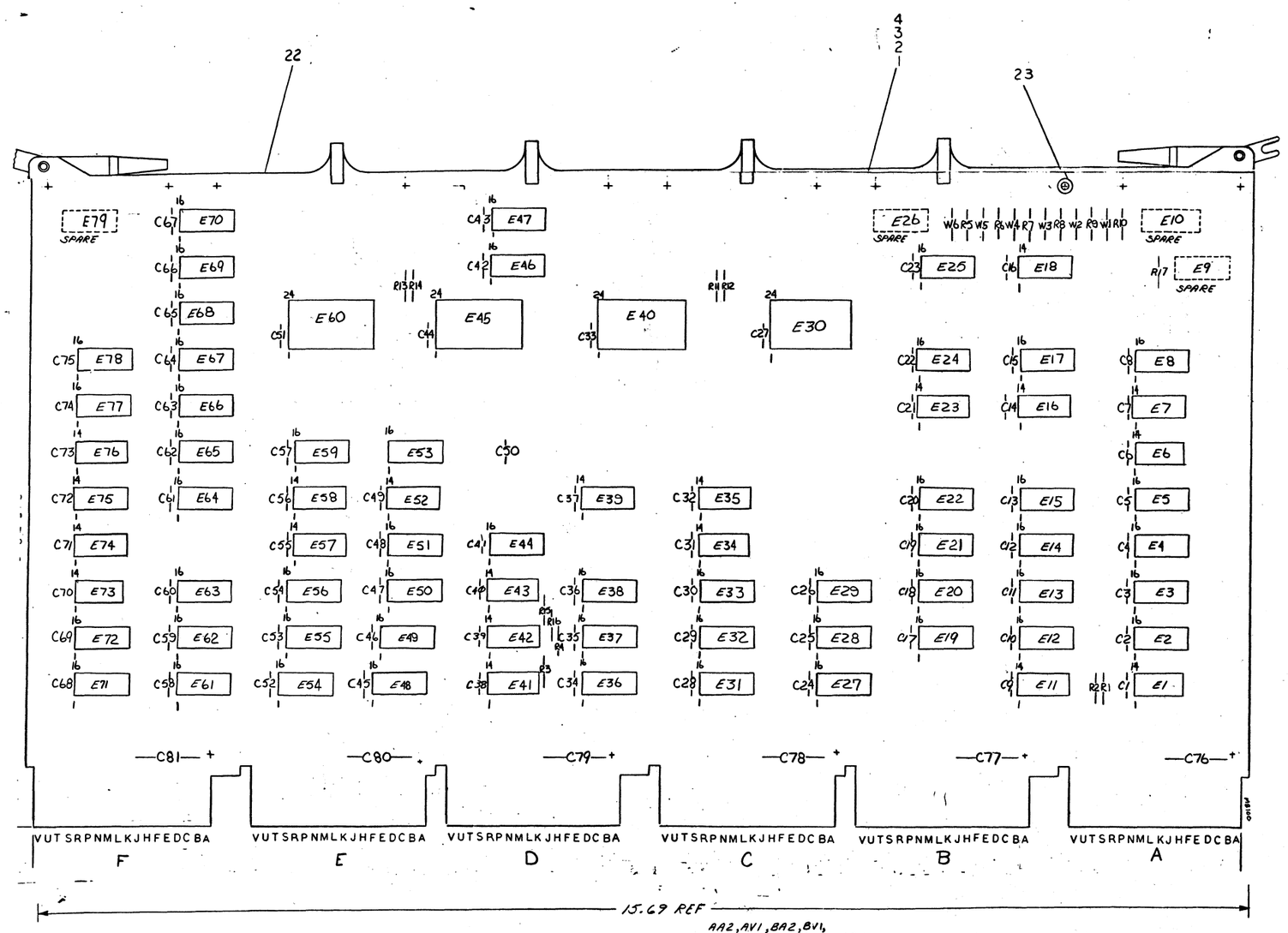


AA2, AV1, BA2, BV1, CA2, CV1, DA2, DV1, EA2, EV1, FA2, FV1

AC2, AN2, AH1, AT1, BC2, BN2, BH1, BT1, CC2, CN2, CH1, CT1, DC2, DN2, DH1 DT1, EC2, EN2, EH1, ET1, FC2, FN2, FH1, FT1

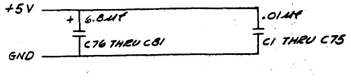


| | | | |
|---|---|---|---|
| DEC 74/82-1 | 8 | 16 | |
| DEC 745174 | 8 | 16 | |
| DEC 745157 | 8 | 16 | |
| DEC 745153 | 8 | 16 | |
| DEC 745181 | 12 | 24 | |
| IC TYPE | GND | +5V | |

GND AND 5V ARE USUALLY PIN 7 AND 14 RESPECTIVELY EXCEPTIONS ARE STATED ABOVE

IC PIN LOCATIONS

| ITEM NO. | AWG | FROM PT | TO PT |
|---|---|---|---|

JUMPER LIST

| REVISIONS | REV | CHK | CHANGE NO. | DEC NO | EIA NO. | DEC NO | EIA NO. |
|---|---|---|---|---|---|---|---|
| S. JENKINS 2/6/73 | C | | M8100-00003 | | | | |
| S. JENKINS 1/6/72 | B | | M8100-00002 | | | | |
| S. JENKINS 4/23/72 | A | | M8100-00001 | | | | |
| INITIATED 3/24/72 | | | | | | | |

SEMICONDUCTOR CONVERSION CHART

| QTY | REF DESIGNATION | DESCRIPTION | PART NO. | ITEM NO. |
|---|---|---|---|---|
| | | PARTS LIST | | |
| | | ETCH BOARD REV C | | |
| 1 | | ETCHED CIRCUIT BOARD | 5009936 | 4 |
| REF | | MODULE ECO HISTORY | E-AH-M8100-0-6 | 3 |
| REF | | ASSY/DRILLING HOLE LAYOUT | E-AH-M8100-0-5 | 2 |
| REF | | X-Y COORDINATE HOLE LOCATION | KCO-M8100-0-4 | 1 |
| 75 | C1 THRU C75 | CAP, .01MF, 100V, 20% | 1001610 | 5 |
| 6 | C76 THRU C81 | CAP, 6.8MF, 35V, 20% | 1000067 | 6 |
| 1 | R5 THRU R10, R17 | RES. 10K, 1/4W, 5% | 1300479 | 7 |
| 2 | R11, R13 | RES., 330Ω, 1/4W, 5% | 1300295 | 8 |
| 2 | R2, R4, R16 | RES., 150Ω, 1/4W, 5% | 1300250 | 9 |
| 3 | R12, R14 | RES., 560Ω, 1/4W, 5% | 1300890 | 10 |
| 2 | E1, E42 | IC. DEC 74S64 | 1910582 | 11 |
| 4 | E30, E40, E45, E60 | IC. DEC, 74S181 | 1910581 | 12 |
| 3 | E23, E35, E74 | IC. DEC, 7450Ø | 1910532 | 13 |
| 8 | E6, E11, E18, E41, E37, E59, E73, E76 | IC DEC, 7450Ø | 1910534 | 14 |
| 2 | E16, E34 | IC DEC, 74S1Ø | 1910536 | 15 |
| 4 | E75, E7, E51, E43 | IC. DEC, 74S11 | 1910557 | 16 |
| 1 | E52 | IC. DEC, 74S2Ø | 1910539 | 17 |
| 39 | E3, E4, E5, E8, E13, E14, E15, E17, E20, E21, E22, E24, E25, E27, E12, E29, E30, E32, E33, E36, E38, E39, E40, E53, E54, E55, E56, E57, E61, E62, E63, E64, E65, E66, E71, E72, E77, E78 | IC. DEC, 74S153 | 1910547 | 18 |
| 9 | E2, E12, E19, E66, E67, E46, E47, E69, E70 | IC DEC 74S174 | 1910550 | 20 |
| 1 | E50 | IC DEC 74S157 | 1910548 | 19 |
| 1 | HANDLE, MODULE | E-AS-1210711-2 | 22 |
| 1 | E44 | IC DEC 74182-1 | 1910551 | 21 |
| 22 | EYELETS | 9006732 | 23 |

| | | | | |
|---|---|---|---|---|
| DRN. | | DATE | DIGITAL EQUIPMENT CORPORATION MAYNARD MASSACHUSETTS | |
| CHK'D | | DATE | | |
| ENG | | DATE 7-72 | TITLE CAP-DATA PATHS | |
| PROJ. ENG. | | DATE 7-72 | | |
| PROD. | | DATE 7-72 | | |
| NEXT HIGHER ASSY E-[illegible]-A | | | | |
| SCALE | | SHEET 1 OF 9 | CODE CS | NUMBER M8100-0-1 REV. C |

CS M8100-0-1

DEC FORM NO. DMR 106

This drawing and specifications, herein, are the property of Digital Equipment Corporation and shall not be reproduced or copied or used in whole or in part as the basis for the manufacture or sale of items without written permission.



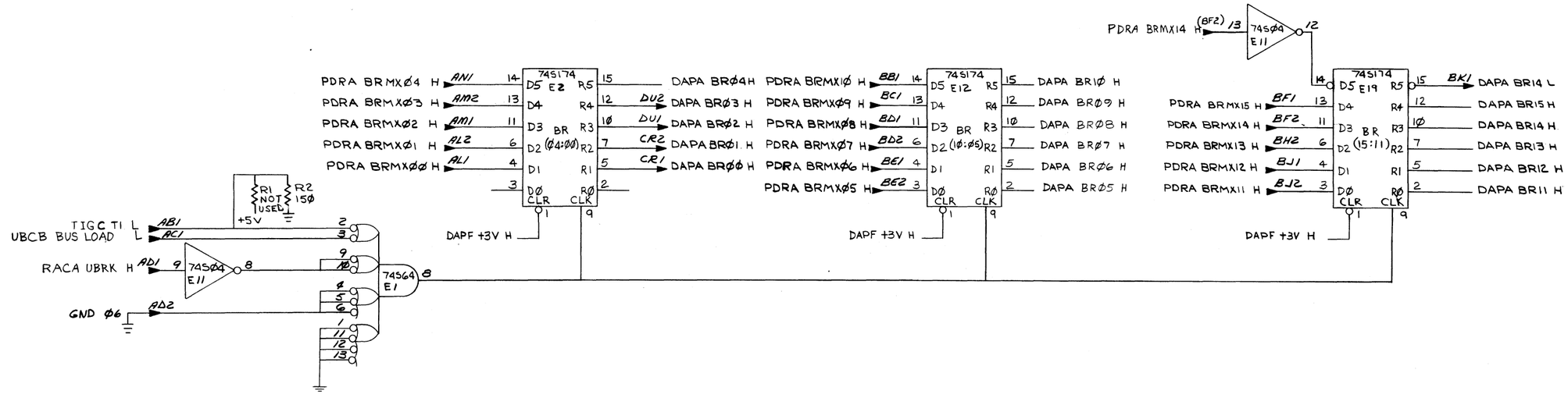


BUS REGISTER SLOT6

| FIRST USED ON OPTION/MODEL | QTY. | DESCRIPTION | PART NO. | ITEM NO. |
|---|---|---|---|---|
| 11/45 | | PARTS LIST | | |

UNLESS OTHERWISE SPECIFIED DIMENSION IN INCHES. TOLERANCES

| DECIMALS | ANGLES |
|---|---|
| .XXX = .005<br>.XX = .02<br>.X = .1 | ±0° 30' |

REMOVE BURRS AND BREAK SHARP CORNERS SURFACE QUALITY ✓

MATERIAL

FINISH

| | | DATE |
|---|---|---|
| DRN. | | 7/9/71 |
| CHK'D | | 2/25/72 |
| ENG. | | 3/1/72 |
| PROJ. ENG. | | 3/3/72 |
| PROD. | | 3/10/72 |

digital EQUIPMENT CORPORATION MAYNARD MASSACHUSETTS

TITLE

DATA PATHS

(DAPA)

NEXT HIGHER ASSY. B-DD-KB11A

SCALE

SHEET 2 OF 9

| SIZE | CODE | NUMBER | REV. |
|---|---|---|---|
| D | CS | M8100-0-1 | C |

DIST.

REVISIONS | REV | CHANGE NO. | CHK

DEC FORM NO. DRD 102-B

This drawing and specifications, herein, are the property of Digital Equipment Corporation and shall not be reproduced or copied or used in whole or in part as the basis for the manufacture or sale of items without written permission.



DAPD KØMX Ø1 H
DAPE K1MX Ø1 H
GRAD SRØ1 H
DAPA BRØ1 H
DAPD KØMX ØØ H
GRAD SRØØ H
DAPA BRØØ H
RACC UBMXØ1 H
RACC UBMX ØØ H
GRAD DRØ1 H
DAPF PCBØ1 H
GRAD DRØØ H
DAPF PCBØØ H
RACC UAMX Ø1 H
RACB UAMX ØØ H
FXPA EALUØ1 H
FXPA EALUØØ H
RACB UBAX Ø1 H
RACB UBAX ØØ H

E20 BMX (Ø1:ØØ) → DAPB BMX Ø1 H, DAPB BMX ØØ H
E21 AMX (Ø1:ØØ) → DAPB AMX Ø1 H, DAPB AMX ØØ H
E22 BAMX (Ø1:ØØ) → BR2 DAPB BAMX Ø1 H, BS1 DAPB BAMX ØØ H

DAPD KØMX Ø3 H
DAPE K1MX Ø3 H
GRAD SRØ3 H
DAPA BRØ3 H
DAPD KØMX Ø2 H
DAPE K1MX Ø2 H
GRAD SRØ2 H
DAPA BRØ2 H
GRAD DRØ3 H
DAPF PCB Ø3 H
GRAD DRØ2 H
DAPF PCB Ø2 H
FXPA EALUØ3 H
FXPA EALUØ2 H

E13 BMX (Ø3:Ø2) → DAPB BMX Ø3 H, DAPB BMX Ø2 H
E14 AMX (Ø3:Ø2) → DAPB AMX Ø3 H, DAPB AMX Ø2 H
E15 BAMX (Ø3:Ø2) → BV2 DAPB BAMX Ø3 H, CC1 DAPB BAMX Ø2 H

DAPE K1MX Ø5 H
GRAD SRØ5 H
DAPA BRØ5 H
DAPE K1MX Ø4 H
GRAD SRØ4 H
DAPA BRØ4 H
GRAE DRØ5 H
DAPF PCBØ5 H
GRAE DRØ4 H
DAPF PCBØ4 H
FXPA EALUØ5 H
FXPA EALUØ4 H

E3 BMX (Ø5:Ø4) → DAPB BMX Ø5 H, DAPB BMX Ø4 H
E4 AMX (Ø5:Ø4) → DAPB AMX Ø5 H, DAPB AMX Ø4 H
E5 BAMX (Ø5:Ø4) → CAI DAPB BAMX Ø5 H, CBI DAPB BAMX Ø4 H

DAPB BMXSILOBL
DAPB BMXSOLOB L
DAPB AMXSI L
DAPB AMXSØ L
DAPB BAMXSI L
DAPB BAMXSØ L

| UBAX Ø1 | ØØ |
|---|---|
| L | L DR |
| L | H PCB |
| H | L SE |
| H | H FP MAINT |

| UAMX Ø1 | ØØ |
|---|---|
| L | L DE |
| L | H PCB |
| H | L SE |
| H | H BE |

| UBMX Ø1 | ØØ |
|---|---|
| L | L KØMX |
| L | H K1MX |
| H | L SE |
| H | H BE |

B,A,& BUS ADDR. MULTIPLEXERS (Ø5:ØØ) SLOT 6

| FIRST USED ON OPTION/MODEL | QTY. | DESCRIPTION | PART NO. | ITEM NO. |
|---|---|---|---|---|
| 11/45 | | PARTS LIST | | |

UNLESS OTHERWISE SPECIFIED DIMENSION IN INCHES. TOLERANCES
DECIMALS: .XXX = .005, .XX = .02, .X = .1 | ANGLES: ±0° 30'
REMOVE BURRS AND BREAK SHARP CORNERS SURFACE QUALITY ✓
MATERIAL — FINISH —

DRN. K. Davis 7-9-71 | CHKD. 2/2/72 | ENG. 8/21/72 | PROJ. ENG. Carl Eckstein 9/25/72 | PROD. 2/1/72

digital EQUIPMENT CORPORATION MAYNARD MASSACHUSETTS

TITLE: DATA PATHS (DAPB)

NEXT HIGHER ASSY. B-DD-KB11-A
SCALE —
SHEET 3 OF 9

| SIZE | CODE | NUMBER | REV. |
|---|---|---|---|
| D | CS | M81ØØ-Ø-1 | C |

DIST.

REVISIONS | REV | CHANGE NO. | CHK

DEC FORM NO DRD 102-B

This drawing and specifications, herein, are the property of Digital Equipment Corporation and shall not be reproduced or copied or used in whole or in part as the basis for the manufacture or sale of items without written permission.

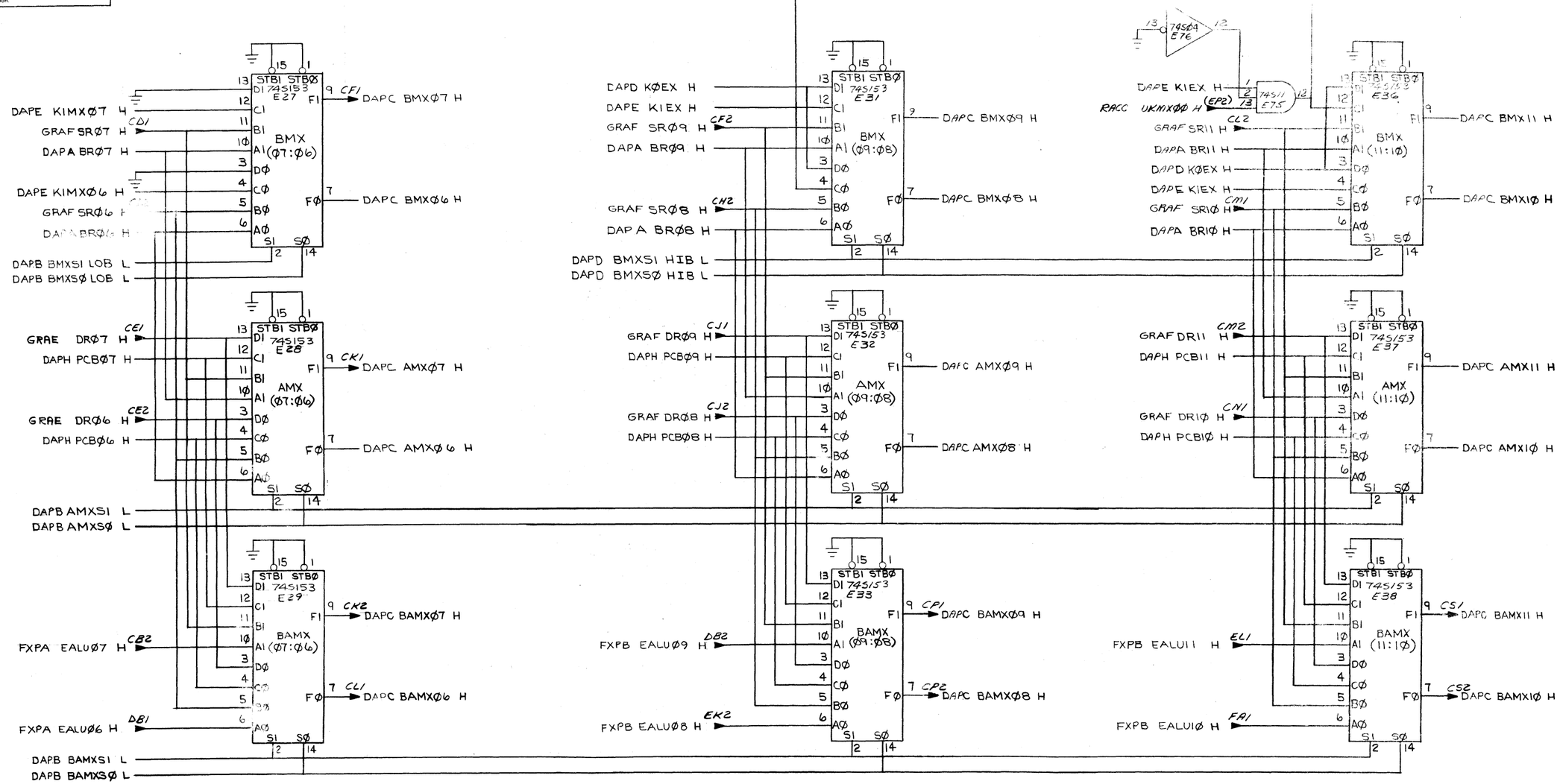


B, A, & BUS ADDR. MULTIPLEXERS (11:Ø7) SLOT6

| FIRST USED ON OPTION/MODEL | QTY. | DESCRIPTION | PART NO. | ITEM NO. |
|---|---|---|---|---|
| 11/45 | | PARTS LIST | | |

UNLESS OTHERWISE SPECIFIED DIMENSION IN INCHES. TOLERANCES
DECIMALS: XXX = .005, XX = .02, X = .1; ANGLES: ±0° 30'
REMOVE BURRS AND BREAK SHARP CORNERS SURFACE QUALITY ✓
MATERIAL —//—
FINISH —//—

DRN. [illegible] DATE 7-9-71
CHK'D [illegible] DATE [illegible]
ENG. [illegible] DATE 7/1/72
PROJ. ENG. [illegible] DATE 7/1/72
PROD. [illegible] DATE 7/5/72

digital EQUIPMENT CORPORATION MAYNARD MASSACHUSETTS

TITLE: DATA PATHS (DAP C)

NEXT HIGHER ASSY. B-SD-KE11A
SCALE —//—
SHEET 4 OF 9

| SIZE | CODE | NUMBER | REV. |
|---|---|---|---|
| D | CS | MS1ØØ-Ø-1 | C |

DIST.

| REVISIONS | REV |
|---|---|
| CHANGE NO. | |
| CHK | |

DEC FORM NO. DRD 102-B

This drawing and specifications, herein, are the property of Digital Equipment Corporation and shall not be reproduced or copied or used in whole or in part as the basis for the manufacture or sale of items without written permission.



DAPD KØEX H
DAPE K1EX H
GRAH SR13 H
DAPA BR13 H
EB1
GRAH SR12 H
DAPA BR12 H
EC1
DAPD BMXS1 HIB L
DAPD BMXSØ HIB L
STBI STBØ DI 74S153 E54 CI BI AI BMX (13:12) DØ CØ BØ AØ SI SØ FI FØ
DAPD BMX13 H
DAPD BMX12 H

DAPD KØEX H
DAPE K1EX H
GRAH SR15 H
DAPA BR15 H
EJ1
GRAH SR14 H
DAPA BR14 H
EH2
DS1
DAPD BMX15 H
DAPD BMX14 H
STBI STBØ DI 74S153 EG1 CI BI AI BMX (15:14) DØ CØ BØ AØ SI SØ FI FØ

IRCD DSTCON←10 H
IRCD DSTCON←4 H
EN1
RACC UKMXØ1 H
RACC UKMXØØ H
EP1
EP2
STBI STBØ DI 74S153 E71 CI BI AI KØMX (Ø3:Ø2) DØ CØ BØ AØ SI SØ FI FØ
74S04 E73
DAPD KØMXØ3 H
DAPD KØMXØ3 B L
DAPD KØMXØ2 H
DAPD KØMXØ2 B L

GRAH DR13 H
DAPH PCB13 H
ED1
GRAH DR12 H
DAPH PCB12 H
ED2
DAPB AMXS1 L
DAPB AMXSØ L
STBI STBØ DI 74S153 E55 CI BI AI AMX (13:12) DØ CØ BØ AØ SI SØ FI FØ
DAPD AMX13 H
DAPD AMX12 H

GRAH DR15 H
DAPH PCB15 H
EJ2
GRAH DR14 H
DAPH PCB14 H
EK1
DS2
DAPD AMX15 H
DAPD AMX14 H
STBI STBØ DI 74S153 EG2 CI BI AI AMX (15:14) DØ CØ BØ AØ SI SØ FI FØ

IRCD DSTCON←2 H
IRCC SRCCON←2 H
TMCE FC H
FRMJ FP ADDR INC L
IRCD DSTCON←1 H
IRCC SRCCON←1 H
DAPF +3V H
RACC UKMX01 H
RACC UKMXØØ H
ER1
ER2
FR2
FR1
ES1
ES2
EP1
EP2
74S00 E76
STBI STBØ DI 74S153 E72 CI BI AI KØMX (Ø1:ØØ) DØ CØ BØ AØ SI SØ FI FØ
74S04 E73
DAPD KØMXØ1 H
DAPD KØMXØ1 B L
DAPD KØMXØØ H
DAPD KØMXØØ B L

DAPB BAMXS1 L
DAPB BAMXSØ L
STBI STBØ DI 74S153 E56 CI BI AI BAMX (13:12) DØ CØ BØ AØ SI SØ FI FØ
FXPB EALU13 H
FXPB EALU12 H
FB1
FB2
EF1
EF2
DAPD BAMX13 H
DAPD BAMX12 H

DAPB BAMXS1 L
DAPB BAMXSØ L
STBI STBØ DI 74S153 EG3 CI BI AI BAMX (15:14) DØ CØ BØ AØ SI SØ FI FØ
FXPB EALU15 H
FXPB EALU14 H
FC1
FS1
EL2
EM1
DAPD BAMX15 H
DAPD BAMX14 H

DAPA BRØ7 H
RACC UBMX01 H
GRAF SR07 H
RACC UBMXØØ H
(AS2)
(CB1)
(AS1)
74S10 E39
74S10 E34
74S00 E35
74S04 E73
DAPD KØEX H

RACC UBMX01 H
RACC UBMXØØ H
GRAA SGNEX MOVB L
(QS2)
(QS1)
CV2
74S00 E35
DAPD BMXS1 HIB L
DAPD BMXSØ HIB L

DAPD BAMX15 H
DAPD BAMX14 H
DAPD BAMX13 H
74S11 E75
FU2
DAPD EX MEM FLAG H

| UKMX | Ø1 | ØØ | KØMX |
|---|---|---|---|
| | L | L | 1 |
| | L | H | 2 |
| | H | L | SRCCON |
| | H | H | DSTCON |

B.A & BUS ADDR, MULTIPLEXERS (15:12); KØMX SLOT6

| FIRST USED ON OPTION/MODEL | QTY. | DESCRIPTION | PART NO. | ITEM NO. |
|---|---|---|---|---|
| 11/45 | | PARTS LIST | | |

UNLESS OTHERWISE SPECIFIED DIMENSION IN INCHES. TOLERANCES
DECIMALS .XXX = .005 .XX = .02 .X = .1 ANGLES ±0° 30'
REMOVE BURRS AND BREAK SHARP CORNERS SURFACE QUALITY ✓
MATERIAL
FINISH

DRN. DATE 2/19/71
CHK'D DATE 2/25/72
ENG. DATE 3/1/72
PROJ. ENG. DATE 3/3/72
PROD. DATE 3/6/72

digital EQUIPMENT CORPORATION MAYNARD MASSACHUSETTS

TITLE
DATA PATHS
(DAPD)

NEXT HIGHER ASSY. B-DD-KB11-A
SCALE
SHEET 5 OF 9

| SIZE | CODE | NUMBER | REV. |
|---|---|---|---|
| D | CS | M8100-0-1 | C |

DIST.

REVISIONS | REV. | CHANGE NO. | CHK

DEC FORM NO DRD 102-B

This drawing and specifications, herein, are the property of Digital Equipment Corporation and shall not be reproduced or copied or used in whole or in part as the basis for the manufacture or sale of items without written permission.



+5V

START VECTOR

| | | | | |
|---|---|---|---|---|
| W6 | 7 | R5 10K | 74S04 E18 | DAPE SV∅7 H |
| W5 | 6 | R6 10K | 74S04 E18 | DAPE SV∅6 H |
| W4 | 5 | R7 10K | 74S04 E18 | DAPE SV∅5 H |
| W3 | 4 | R8 10K | 74S04 E18 | DAPE SV∅4 H |
| W2 | 3 | R9 10K | 74S04 E18 | DAPE SV∅3 H |
| W1 | 2 | R10 10K | 74S04 E18 | DAPE SV∅2 H |

JUMPER ARRANGEMENT

| | |
|---|---|
| WG IN | 173200 + XXX |
| WG OUT | ∅∅∅∅∅∅ + XXX |

XXX OFFSET (7 BITS)
BITS ∅∅ & ∅1 ALWAYS ∅

TMCB PIRQ L AJ2
TMCB SEGT L AK1
TMCB FP TRAP L AK2
→ 74S10 E16 → DAPE TV∅5*∅7 H

TMCB PWRF L AE1
IRCD IOT L AE2
→ 74S10 E16 → DAPE TV∅4 H

TMCB TOK L AF1
IRCD OPCODE3 L AF2
→ 74S11 E7 → DAPE TV∅3 H

IRCD EMT L AH2
IRCD TRAP L AJ1
UBCB PETRAP (1) L AP1
→ 74S11 E7 → DAPE TV∅2 H

→ 74S04 E11 → DAPE TV∅6 H

R17 10K +5V

→ 74S04 E11 → DAPE TV∅1 H

## KIMX (∅4:∅3)

| | | |
|---|---|---|
| DAPA BR∅3 H | STB1 STB∅ | |
| DAPE TV∅4 H | DI 74S153 E17 | |
| DAPE SV∅4 H | C1 | |
| DAPA BR∅2 H | B1 | F1 → DAPE KIMX∅4 H |
| DAPE TV∅3 H | A1 | |
| DAPE SV∅3 H | D∅ | |
| | C∅ | F∅ → DAPE KIMX∅3 H |
| | B∅ | |
| | A∅ | |
| | S1 S∅ | |

RACC UKMX∅1 H (EP1)
RACC UKMX∅∅ H (EP2)

## KIMX (∅2:∅1)

| | | |
|---|---|---|
| DAPA BR∅1 H | STB1 STB∅ | |
| DAPE TV∅2 H | DI 74S153 E8 | |
| DAPE SV∅2 H | C1 | |
| DAPA BR∅∅ H | B1 | F1 → DAPE KIMX∅2 H |
| DAPE TV∅1 H | A1 | |
| | D∅ | |
| | C∅ | F∅ → DAPE KIMX∅1 H |
| | B∅ | |
| | A∅ | |
| | S1 S∅ | |

RACC UKMX∅1 H (EP1)
RACC UKMX∅∅ H (EP2)

## KIMX

| | | |
|---|---|---|
| DAPA BR∅7 H | STB1 STB∅ | |
| | DI 74S153 E25 | |
| | C1 | |
| | B1 | F1 → DAPE KIEX H |
| DAPE SV∅7 H | A1 | |
| DAPA BR∅6 H | D∅ (EX:7) | |
| | C∅ | F∅ → DAPE KIMX∅7 H |
| DAPE TV∅5*∅7 H | B∅ | |
| DAPE SV∅7 H | A∅ | |
| | S1 S∅ | |

## KIMX (∅6:∅5)

| | | |
|---|---|---|
| DAPA BR∅5 H | STB1 STB∅ | |
| | DI 74S153 E24 | |
| | C1 | |
| DAPE TV∅6 H | B1 | F1 → DAPE KIMX∅6 H |
| DAPE SV∅6 H | A1 | |
| DAPA BR∅4 H | D∅ | |
| | C∅ | F∅ → DAPE KIMX∅5 H |
| DAPE TV∅5*∅7 H | B∅ | |
| DAPE SV∅5 H | A∅ | |
| | S1 S∅ | |

| TRAP VECTOR | | UKMX∅1 | ∅∅ | KIMX |
|---|---|---|---|---|
| RSVD INST | 10 (4 LEFT SHIFTED) | L | L | SV |
| TOK+3 | 14 | L | H | TV |
| IOT | 20 | H | L | SOB & MAREX DISPLACEMENT |
| PWRF | 24 | H | H | BRXX DISPLACEMENT |
| EMT | 30 (14 LEFT SHIFTED) | | | |
| TRAP | 34 (16 LEFT SHIFTED) | | | |
| PIRQ | 240 | | | |
| FP TRAP | 244 | | | |
| SEGT | 250 | | | |
| PERR | 114 | | | |

NOTE:
LEFT SHIFTING TAKES PLACE ON FLOWS 12 RSD.10

TRAP VECTORS, START VECTOR, & KIMX — SLOT6

| FIRST USED ON OPTION/MODEL | QTY. | DESCRIPTION | PART NO. | ITEM NO. |
|---|---|---|---|---|
| 11/45 | | PARTS LIST | | |

UNLESS OTHERWISE SPECIFIED DIMENSION IN INCHES. TOLERANCES
DECIMALS: .XXX = .005, .XX = .02, .X = .1 — ANGLES: ±0° 30'
REMOVE BURRS AND BREAK SHARP CORNERS SURFACE QUALITY ✓
MATERIAL
FINISH

DRN. — DATE 7-12-71
CHK'D — DATE
ENG. — DATE 2/25/72
PROJ. ENG. — DATE 2/25/72
PROD. — DATE 2/25/72

digital EQUIPMENT CORPORATION MAYNARD, MASSACHUSETTS

TITLE: DATA PATHS (DAPE)

NEXT HIGHER ASSY.: B-DD-KB11-A
SCALE
SHEET 6 OF 9

SIZE D | CODE CS | NUMBER M8100-0-1 | REV. C
DIST.

REVISIONS | REV. | CHANGE NO | CHK

DEC FORM NO. DRD 102-B

This drawing and specifications, herein, are the property of Digital Equipment Corporation and shall not be reproduced or copied or used in whole or in part as the basis for the manufacture or sale of items without written permission.



DAPF COUTØ3 L
COUTØ3 = GØ*(PØ+CIN)

74182-1 E44 CARRY COUTX — GØ, PØ, CIN

GRAA ALUC H — FD1 — 74S04 E76

DAPB BMXØ3 H
DAPB AMXØ3 H
DAPB BMXØ2 H
DAPB AMXØ2 H
DAPB BMXØ1 H
DAPB AMXØ1 H
DAPB BMXØØ H
DAPB AMXØØ H

745181 E3Ø ALU (Ø3:ØØ) — A=B COUT G P — S3 S2 S1 SØ M CIN

DAPF ALUØ4 H
DAPF PCBØ3 H
DAPH ALU11 H

745153 E64 SHFR (Ø3:Ø2) — STB1 STBØ — DI CI BI AI DØ CØ BØ AØ — F1 FØ — S1 SØ

FK1 — BUS A=B (15:8) H — DAPF SHFRØ3 H
FK2 — DAPF SHFRØ2 H

+5V — R11 33ØΩ — R12 56ØΩ

74S11 E57 — FM2 — DAPF A=B(7:Ø) H

74S4Ø E74 — FM1 — DAPF A=B(15:Ø) L

DAPF PCBØ1 H
DAPH ALUØ9 H

745153 E65 SHFR (Ø1:ØØ) — STB1 STBØ — DI CI BI AI DØ CØ BØ AØ — F1 FØ — S1 SØ

FL1 — DAPF SHFRØ1 H
FL2 — DAPF SHRØØ H

DAPF PCBØØ H
DAPH ALUØ8 H

DAPC BMXØ7 H
DAPC AMXØ7 H
DAPC BMXØ6 H
DAPC AMXØ6 H
DAPB BMXØ5 H
DAPB AMXØ5 H
DAPB BMXØ4 H
DAPB AMXØ4 H

745181 E4Ø ALU (Ø7:Ø4) — A=B COUT G P — S3 S2 S1 SØ M CIN

DAPF LS3 H
DAPF LS2 H
DAPF LS1 H
DAPF LSØ H
DAPF LM H
DAPF COUTØ3 L

DAPF COUTØ7 L
COUTØ7 = G1*(P1+G0*P0+CIN*P0)

74182-1 E44 CARRY COUTY — G1, P1

74S4Ø E58 — DAPF +3V A H

745153 E68 STBØ SHFR (ØG) — DAPH PCBØ6 H, DAPH ALU14 H — FN1 — DAPF SHFRØ6 H

745153 E78 STB1 STBØ SHFR (Ø5:Ø4) — DAPF PCBØ5 H, DAPH ALU13 H — FP1 — DAPF SHFRØ5 H

DAPH PCBØ4 H, DAPH ALU12 H — FP2 — DAPF SHFRØ4 H

DAPF SHFRS1 H
DAPF SHFRSØ H

GRAA SHFRS1 L — FD2 — 74S04 E76
GRAA SHFRSØ L — FE1 — 74S04 E76
GRAA ALUM L — FE2 — 74S04 E39
GRAA ALUSØ L — FF1 — 74S04 E39
GRAA ALUS1 L — FF2 — 74S04 E39
GRAA ALUS2 L — FH2 — 74S04 E39
GRAA ALUS3 L — FJ1 — 74S04 E39

DAPF ALUØ3 H
DAPF ALUØ2 H
DAPF ALUØ1 H
FJ2 — DAPF ALUØØ H

DAPF ALUØ7 H
DAPF ALUØ6 H
DAPF ALUØ5 H
DAPF ALUØ4 H

745174 E67 PCA (Ø5:ØØ) — D5 D4 D3 D2 D1 DØ — R5 R4 R3 R2 R1 RØ — CLR CLK

DAPF ALUØ5 H
DAPF ALUØ4 H
DAPF +3V H
DAPJ CLKPCA H

745174 E66 PCB (Ø5:ØØ) — D5 D4 D3 D2 D1 DØ — R5 R4 R3 R2 R1 RØ — CLR CLK

DAPF PCBØ5 H
DAPF PCBØ4 H
DAPF PCBØ3 H
DAPF PCBØ2 H
DAPF PCBØ1 H
DAPF PCBØØ H
DAPJ CLKPCB H

74S4Ø E11 — DAPF +3V H

GRAA SHFRSØ L — (FE1) — 74S04 E76 — DAPF SHFRSØ B H

GRAA SHFRS1 L — (FD2) — 74S04 E76 — DAPF SHFRS1 B H

SHFR S1 SØ H
L L SWAB (OB SWAP)
L H PCB
H L ALU
H H RT. SHIFT ALU

74S181 - ALU

| S3 S2 S1 SØ | M=H LOGIC FUNCTIONS | M=L; ARITHMETIC OPERATIONS $C_N = Ø = H$ | $C_N = 1 = L$ |
|---|---|---|---|
| L L L L | F = $\overline{A}$ | F=A | F=A PLUS 1 |
| L L H H | F = Ø | F=MINUS 1 (2'S COMP) | F = ZERO |
| L H H L | F = A $\forall$ B | F=A MINUS B MINUS 1 | F=A MINUS B |
| L H H H | F=A $\overline{B}$ | F=A$\overline{B}$ MINUS 1 | F=A $\overline{B}$ |
| H L L H | F=$\overline{A \forall B}$ | F = A PLUS B | F=A PLUS B PLUS 1 |
| H L H L | F=B | F=(A+$\overline{B}$) PLUS AB | F=(A+$\overline{B}$) PLUS AB PLUS 1 |
| H L H H | F=AB | F=AB MINUS 1 | F=AB |
| H H L L | F=1 | F=A PLUS A | F=A PLUS A PLUS 1 |
| H H H L | F=A+B | F=(A+$\overline{B}$) PLUS A | F=(A+$\overline{B}$) PLUS A PLUS 1 |
| H H H H | F=A | F=A MINUS 1 | F=A |

ALU (Ø7:ØØ), SHIFTER (Ø6:ØØ), PCA & PCB (Ø5:ØØ) SLOT6

| FIRST USED ON OPTION/MODEL |
|---|
| 11/45 |

UNLESS OTHERWISE SPECIFIED DIMENSION IN INCHES. TOLERANCES
DECIMALS: .XXX = .005, .XX = .02, .X = .1 — ANGLES: ±0° 30'
REMOVE BURRS AND BREAK SHARP CORNERS SURFACE QUALITY ✓
MATERIAL //
FINISH //

| QTY. | DESCRIPTION | PART NO. | ITEM NO. |
|---|---|---|---|

PARTS LIST

DRN. — DATE 7-12-71
CHK'D — DATE 7/25/72
ENG. — DATE 8/25/72
PROJ. ENG. — DATE 8/25/72
PROD. — DATE 11/7/72

digital EQUIPMENT CORPORATION MAYNARD MASSACHUSETTS

TITLE: DATA PATHS (DAPF)

NEXT HIGHER ASSY. B DD-KB11-A
SIZE D | CODE CS | NUMBER M8ØØ-Ø-1 | REV C
SCALE //
SHEET 7 OF 9
DIST.

REVISIONS | REV | CHANGE NO | CHK

DEC FORM NO DRD 102-B

This drawing and specifications, herein, are the property of Digital Equipment Corporation and shall not be reproduced or copied or used in whole or in part as the basis for the manufacture or sale of items without written permission.



DAPH COUT 11 L
COUT11 = G2(P2+G1 P1 + GØ G1 PØ + CIN GØ G1)

COUT 11
CARRY
74182-1
E44
G2 P2

BUS A=B(15:8) H

74S181 E45 ALU (11:Ø8)
DAPC BMX11 H
DAPC AMX11 H
DAPC BMX1Ø H
DAPC AMX1Ø H
DAPC BMXØ9 H
DAPC AMXØ9 H
DAPC BMXØ8 H
DAPC AMXØ8 H
DAPH HM H
DAPF COUTØ7 L
DAPF SHFR S1 H
DAPF SHFR SØ H

74S153 E59 SHFR (11:1Ø)
DAPH ALU12 H
DAPH PCB11 H
DAPF ALUØ3 H
DAPH PCBØ H
DAPF ALUØ2 H
DM1
DM2
DAPH SHFR11 H
DAPH SHFR1Ø H

74S153 E53 SHFR (Ø9:Ø8)
DAPH PCBØ9 H
DAPF ALU Ø1 H
DAPH PCBØ8 H
DAPF ALUØØ H
DN1
DP1
DAPH SHFR Ø9 H
DAPH SHFR Ø8 H

BUS A=B (15:8) H
74S181 E6Ø ALU (15:12)
DAPD BMX15 H
DAPD AMX15 H
DAPD BMX14 H
DAPD AMX14 H
DAPD BMX13 H
DAPD AMX13 H
DAPD BMX12 H
DAPD AMX12 H
R13 330Ø
R14 56Ø Ø
+5V
DAPH COUT11L
DAPH HS3 H
DAPH HS2 H
DAPH HS1 H
DAPH HSØ H

74S04 E39
COUT15 = GP
DAPH COUT15 L

74S153 E68 SHFR (14)
DAPH PCB14 H
DAPF ALUØ6 H
DP2
DAPH SHFR14 H

74S153 E77 SHFR (13:12)
DAPH PCB13 H
DAPF ALUØ5 H
DAPH PCB12 H
DAPF ALUØ4 H
DR2
DR1
DAPH SHFR13 H
DAPH SHFR12 H

GRAA ALUM L (FE2)
74S04 E58
DAPH HM H

DAPH ALU11 H
DAPH ALU1Ø H
DAPH ALUØ9 H
DAPH ALUØ8 H

74S174 E46 PCA (11:Ø6)
74S174 E47 PCB (11:Ø6)
DAPF ALUØ7 H
DAPF ALUØ6 H
DAPF +3V H
DAPH PCB11 H
DAPH PCB1Ø H
DAPH PCBØ9 H
DAPH PCBØ8 H
DAPH PCBØ7 H
DAPH PCBØ6 H
DAPJ CLKPCA H
DAPJ CLKPCB H

DAPH ALU15 H
DAPH ALU14 H
DAPH ALU13 H
DAPH ALU12 H

74S174 E69 PCA (15:12)
74S174 E7Ø PCB (15:12)
DAPH PCB15 H
DAPH PCB14 H
DAPH PCB13 H
DAPH PCB12 H
DAPJ CLKPCA H
DAPJ CLKPCB H

GRAA ALUS3 L (FJ1) 74S04 E58 DAPH HS3 H
GRAA ALUS2 L (FH2) 74S04 E58 DAPH HS2 H
GRAA ALUS1 L (FF2) 74S04 E58 DAPH HS1 H
GRAA ALUSØ L (FF1) 74S04 E58 DAPH HSØ H

ALU(15:Ø8),SHIFTER(14:Ø8), PCA & PCB(15:Ø6) SLOT 6

| FIRST USED ON OPTION/MODEL | QTY. | DESCRIPTION | PART NO. | ITEM NO. |
|---|---|---|---|---|
| 11/45 | PARTS LIST | | | |

UNLESS OTHERWISE SPECIFIED DIMENSION IN INCHES. TOLERANCES
DECIMALS: .XXX = .005, .XX = .02, .X = .1 | ANGLES: ±0° 30'
REMOVE BURRS AND BREAK SHARP CORNERS SURFACE QUALITY ✓
MATERIAL
FINISH

DRN [illegible] DATE 1/10/71
CHK D. [illegible] DATE 2/23/72
ENG. [illegible] DATE 2/5/72
PROJ. ENG. [illegible] DATE 2/27/72
PROD. [illegible] DATE 2/25/72
NEXT HIGHER ASSY. B-DD-KB11-A
SCALE
SHEET 8 OF 9

digital EQUIPMENT CORPORATION MAYNARD MASSACHUSETTS

TITLE: DATA PATHS (DAPH)

SIZE D | CODE CS | NUMBER M81ØØ-Ø-1 | REV. C | DIST.

REVISIONS: REV | CHANGE NO. | CHK

DEC FORM NO DRD 102-B

This drawing and specifications, herein, are the property of Digital Equipment Corporation and shall not be reproduced or copied or used in whole or in part as the basis for the manufacture or sale of items without written permission.

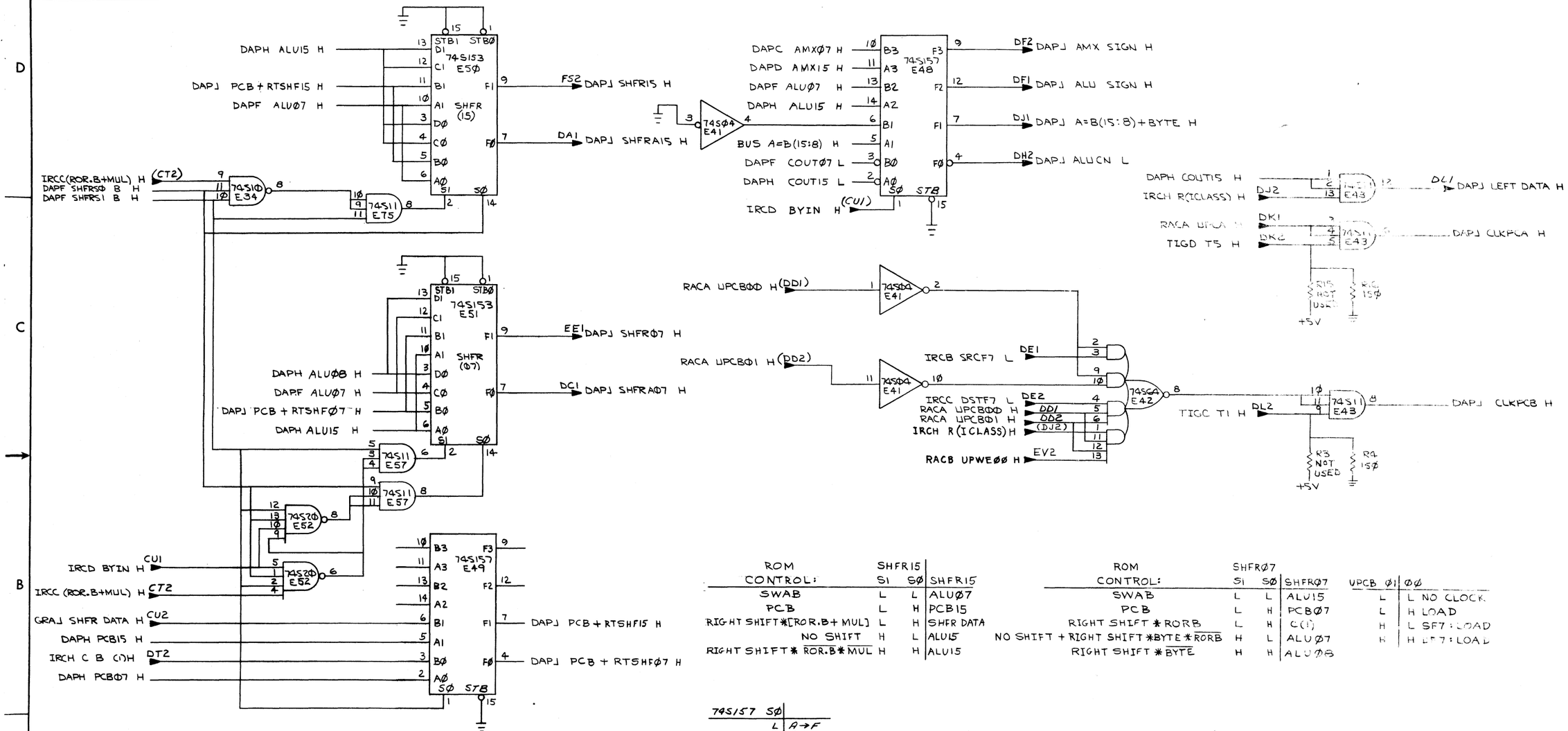


| ROM CONTROL: | SHFR15 S1 | SHFR15 SØ | SHFR15 |
|---|---|---|---|
| SWAB | L | L | ALUØ7 |
| PCB | L | H | PCB15 |
| RIGHT SHIFT*[ROR.B+MUL] | L | H | SHFR DATA |
| NO SHIFT | H | L | ALU15 |
| RIGHT SHIFT * ROR.B * MUL | H | H | ALU15 |

| ROM CONTROL: | SHFRØ7 S1 | SHFRØ7 SØ | SHFRØ7 |
|---|---|---|---|
| SWAB | L | L | ALU15 |
| PCB | L | H | PCBØ7 |
| RIGHT SHIFT * RORB | L | H | C(Ø) |
| NO SHIFT + RIGHT SHIFT * BYTE * RORB | H | L | ALUØ7 |
| RIGHT SHIFT * BYTE | H | H | ALUØ8 |

| UPCB Ø1 | ØØ |
|---|---|
| L | L NO CLOCK |
| L | H LOAD |
| H | L SFT: LOAD |
| H | H LFT: LOAD |

| 74S157 SØ | |
|---|---|
| L | A→F |
| H | B→F |

SHIFTER (15:Ø7); PCA & PCB CLOCKS SLOT 6

| FIRST USED ON OPTION/MODEL | QTY. | DESCRIPTION | PART NO. | ITEM NO. |
|---|---|---|---|---|
| 11/45 | | PARTS LIST | | |

UNLESS OTHERWISE SPECIFIED DIMENSION IN INCHES. TOLERANCES
DECIMALS .XXX ± .005, .XX ± .02, .X ± .1 — ANGLES ±0° 30'
REMOVE BURRS AND BREAK SHARP CORNERS SURFACE QUALITY ✓
MATERIAL —
FINISH —

DRN. Z. Cardoza 8-12-71
CHK'D. [illegible] 8/11/72
ENG. [illegible] DATE 2/23/72
PROJ. ENG. Erik [illegible] DATE 2/25/72
PROD. [illegible] DATE 2/27/72

digital EQUIPMENT CORPORATION MAYNARD MASSACHUSETTS

TITLE: DATA PATHS (DAPJ)

NEXT HIGHER ASSY. B-DD-KB11-A
SCALE —
SHEET 9 OF 9

SIZE D | CODE CS | NUMBER M9100-0-1 | REV C | DIST.

REVISIONS | REV | CHANGE NO. | CHK

DEC FORM NO DRD 102-B

This drawing and specifications, herein, are the property of Digital Equipment Corporation and shall not be reproduced or copied or used in whole or in part as the basis for the manufacture or sale of items without written permission.

UNLESS OTHERWISE NOTED RESISTANCE IS IN OHMS, ±5%, CAPACITANCE IS IN MFD, ±20%. CAPACITORS WITHOUT VALUE NOTED ARE .01 MFD.

2. RESISTORS MARKED WITH ASTERISK ARE NOT USED.

3. LOCATIONS MARKED E1, E9, E10, E25, E27, & E42 ARE SPARES.

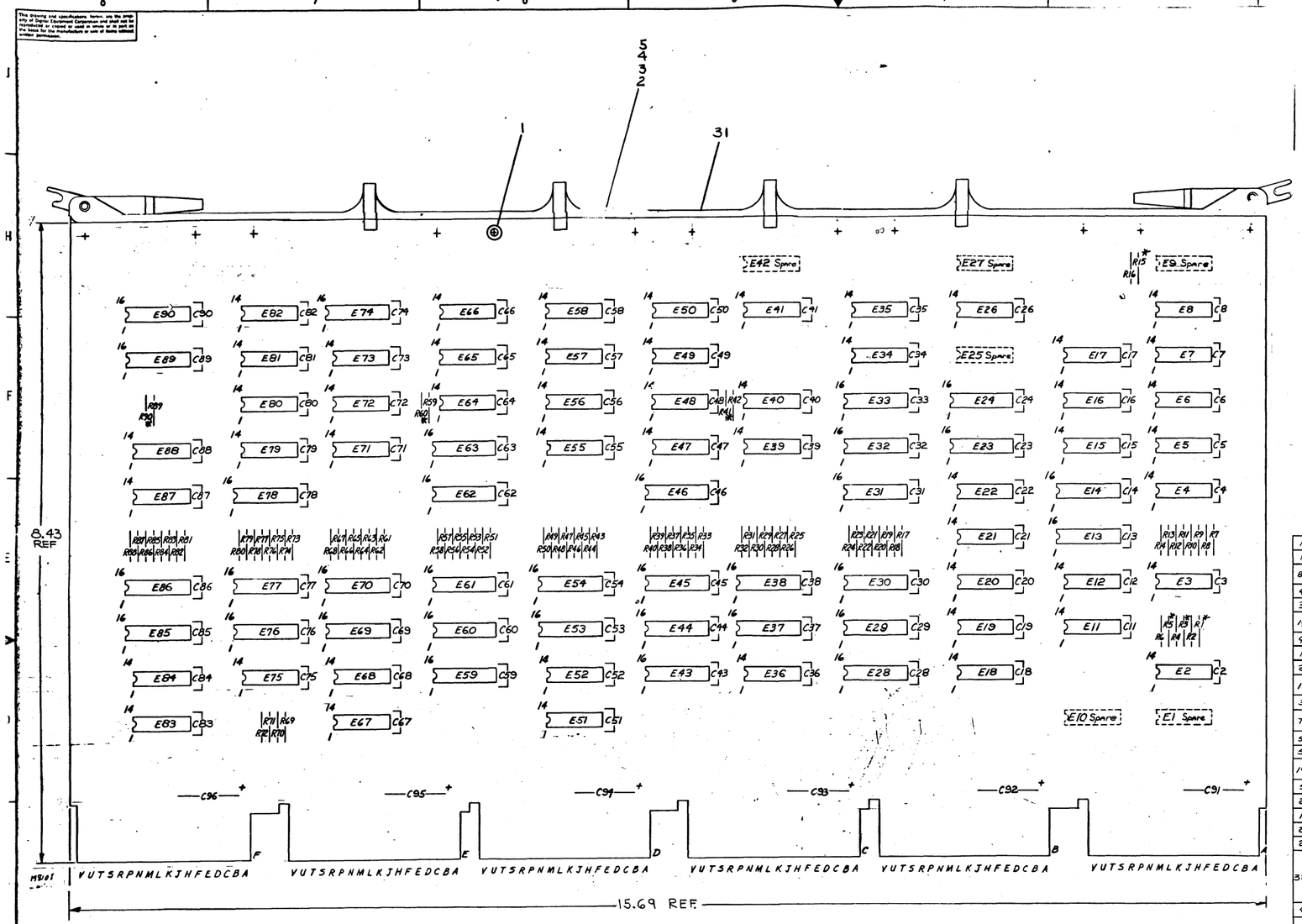


AA2, AV1, BA2, BV1, CA2, CV1, DA2, DV1, EA2, EV1, FA2, FV1

+5V — 6.8 µF 35V C91 THRU C96 — .01 µF C2 THRU C8, C11 THRU C24, C26, C28 THRU C91, C93 THRU C96

AC2, AN2, AH1, AT1, BC2, BN2, BH1, BT1, CC2, CN2, CH1, CT1, DC2, DN2, DH1, DT1, EC2, EN2, EH1, ET1, FC2, FN2, FH1, FT1

| | | | HANDLE, MODULE | C-PS-RADII-2 | 31 |
|---|---|---|---|---|---|
| 1 | E74 | | I.C. DEC, DM8598-AD | 23-CB341 | 30 |
| 8 | E37, E38, E53, E54, E63, E76, E85, E86 | | IC. DEC, 3101A | 19/0658 | 29 |
| 4 | E31, E46, E62, E78 | | IC. DEC 74S174 | 19/0552 | 28 |
| 3 | E28, E93, E59 | | I.C. DEC, 74S174 | 19/0550 | 27 |
| 10 | E29, E30, E44, E45, E68, E69, E70, E77, E83, E96 | | I.C. DEC, 74S158 | 19/0549 | 26 |
| 4 | E23, E29, E32, E33 | | IC. DEC, 74S153 | 19/0547 | 25 |
| 1 | E68 | | IC.DEC, 74S112 | 19/0545 | 24 |
| 2 | E50, E79 | | I.C. DEC, 74S74 | 19/0544 | 23 |
| 11 | E5, E6, E46, E18, E79, E35, E98, E49, E58, E75, E86 | | I.C. DEC, 74S64 | 19/0542 | 22 |
| 3 | E68, E73, E81 | | I.C. DEC, 74S20 | 19/0539 | 21 |
| 7 | E8, E24, E34, E41, E65, E71, E82 | | I.C. DEC, 74S11 | 19/0537 | 20 |
| 5 | E2, E15, E90, E22, E56 | | I.C. DEC, 74S10 | 19/0536 | 19 |
| 5 | E14, E12, E52, E68, E84 | | I.C. DEC, 74S05 | 19/0535 | 18 |
| 10 | E7, E36, E39, E40, E51, E57, E62, E67, E85, E87 | | IC. DEC, 74S04 | 19/0534 | 17 |
| 5 | E8, E4, E13, E26, E88 | | IC. DEC, 74S02 | 19/0532 | 16 |
| 2 | E13, E14 | | I.C. DEC, 7811 | 19/0096 | 15 |
| 1 | E97 | | IC. DEC, 74H50 | 1909060 | 14 |
| 2 | E55, E72 | | I.C. DEC, 74H30 | 1909059 | 13 |
| 2 | R70, R72 | | RES., 75Ω Ω, 1/4W, ±5% | 1301401 | 12 |
| 32 | R17, R19, R21, R23, R25, R27, R29, R31, R33, R35, R37, R39, R43, R45, R47, R49, R51, R53, R55, R57, R61, R63, R65, R67, R73, R75, R77, R79, R81, R83, R85, R87 | | RES., 680 Ω, 1/8W, ±5% | 1301624 | 11 |
| 4 | R8, R10, R12, R14 | | RES., 560 Ω, 1/8W, ±5% | 1301890 | 10 |
| 7 | R2, R4, R6, R16, R92, R59, R81 | | RES., 150 Ω, 1/4W, ±5% | 1300250 | 9 |
| 38 | R1, R9, R11, R13, R15, R18, R20, R22, R24, R26, R28, R30, R32, R34, R36, R38, R40, R42, R44, R46, R48, R50, R52, R54, R56, R58, R62, R64, R66, R68, R70, R72, R74, R76, R78, R80, R82, R84, R86, R88 | | RES., 330 Ω, 1/4W, ±5% | 1300895 | 8 |
| 84 | C2-C8, C11-C24, C26, C28-C41, C43-C90 | | CAP, .01µF, 100V, ±20% DISC | 1001610 | 7 |
| 6 | C91-C96 | | CAP, 6.8µF, 35V, ±20% 'S TANT | 1000067 | 6 |
| 1 | | | ETCHED CIRCUIT BOARD | 5009807 | 5 |
| REF | | | MODULE ECO HISTORY | B-MN-MB101-B-6 | 4 |
| REF | | | ASSY/DRILLING HOLE LAYOUT | E-AH-MB101-B-5 | 3 |
| REF | | | X-Y COORDINATE HOLE LOCATION | K-CC-MB101-B-4 | 2 |
| 12 | | | EYELET | 9006732 | 1 |
| QTY | REF DESIGNATION | | DESCRIPTION | PART NO. | ITEM NO. |

PARTS LIST

ETCH BOARD REV. B

| | | | | | | | |
|---|---|---|---|---|---|---|---|
| DEC DM8598-AD | 8 | 16 | | | | | |
| DEC 3101A | 8 | 16 | | | | | |
| DEC 74S174 | 8 | 16 | | | | | |
| DEC 74S158 | 8 | 16 | | | | | |
| DEC 74S153 | 8 | 16 | | | | | |
| DEC 74S194 | 8 | 16 | | | | | |
| DEC 74S112 | 8 | 16 | | | | | |
| DEC 74191 | 8 | 16 | | | | | |
| IC TYPE | GND | +5V | | | | | |

GND AND 5V ARE USUALLY PIN 7 AND 14 RESPECTIVELY EXCEPTIONS ARE STATED ABOVE

IC PIN LOCATIONS

| ITEM NO. | AWG | FROM PT | TO PT |
|---|---|---|---|

JUMPER LIST

| REV | REVISIONS | CHG | CHANGE NO. | DATE | APPROVED |
|---|---|---|---|---|---|
| A | PRODUCTION RELEASE | | 4376 | 4-28-72 | J. JENKINS |
| B | ECO C0331 | | 4515 | 10-10-72 | J. JENKINS |
| C | ECO C0331 | | 4602 | 12-11-72 | J. JENKINS |
| D | ECO C0331 | | 4603 | 12-20-72 | J. JENKINS |
| E | ECO C0331 | | 4605 | 1-2-73 | J. JENKINS |
| F | ECO C0331 | | 4606 | 1-3-73 | J. JENKINS |

DEC NO. | EIA NO. | DEC NO. | EIA NO.

SEMICONDUCTOR CONVERSION CHART

DRN. | DATE | CHK'D | DATE | ENG. | DATE | ENG. MGR. | DATE | PROD. | DATE

NEXT HIGHER ASSY: B-M311-0

SCALE: 1/1 | SHEET 1 OF 10

TITLE: GENERAL REGS. & ALU. CNTL.

CODE: E1 | NUMBER: MB101-2-1 | REV: D

DIGITAL EQUIPMENT CORPORATION MAYNARD MASSACHUSETTS

DEC FORM NO. DRC 106

This drawing and specifications, herein, are the property of Digital Equipment Corporation and shall not be reproduced or copied or used in whole or in part as the basis for the manufacture or sale of items without written permission.

IRCH DIV + ASHC H (FM1) → 74S00 E88 pin 9
GRAH DR15 L → 74S00 E88 pin 10
74S00 E88 pin 8 → 74S20 E73 pin 1
IRCH C (Ø) H (FB1) → 74S20 E73 pin 2
GRAA ROM SØ L → 74S20 E73 pin 4
74S20 E73 pin 6 → 74S20 E73 pin 13
IRCH C (1) H (FC1) → 74S20 E73 pin 12
74S20 E73 pin 8 → 74S20 E73 pin 10
74S20 E73 pin 9 → 74S00 E88 pin 1

IRCH SXT H (FM2) → 74S00 E88 pin 4
IRCH N (1) H (AL1) → 74S00 E88 pin 5
74S00 E88 pin 6 → 74S00 E88 pin 2
74S00 E88 pin 3 → GRAA CDEP L

GRAA OB SWAP L → 74S11 E65 pin 3
IRCD BYIN H (DF1) → 74S11 E65 pin 4
74S11 E65 pin 6 → AF1 → GRAA WORD+OB SWAP L
74S00 E17 pin 6 → CC1 → GRAA WORD+OB SWAP H

IRCH SUBROMA4 H (FR1) → CS DM8598-AD E74 A4
IRCH SUBROMA3 H (FR2) → A3
IRCH SUBROMA2 H (FS1) → A2
IRCH SUBROMA1 H (FS2) → A1
IRCH SUBROMAØ H (FT2) → AØ
23-CØ3A1 ALU CNTL ROM
M7 → GRAA ROMM H
M6 → GRAA ROMC H
M5 → GRAA ROMSHFS1 H
M4 → GRAA ROMSHFSØ H
M3 → GRAA ROMS3 H
M2 → GRAA ROMS2 H
M1 → GRAA ROMS1 H
MØ → GRAA ROMSØ H

GRAA ROMSØ H → 74S04 E66 → GRAA ROMSØ L

GRAA MODE H → 74S158 E89 B3
GRAA CIN L → B2
RACA USHFØ1 H (ET2) → B1
RACA USHFØØ H (ES2) → BØ
GRAA SWAP L → SØ
STB → 15
A3 ← GRAA CDEP L
A2 ← 74S20 E81 pin 6
A1 ← 74S11 E71 pin 8
AØ ← 74S11 E71 pin 6
F3 → FE2 → GRAA ALUM L
F2 → FD1 → GRAA ALUC H
F1 → FD2 → GRAA SHFRS1 L
FØ → FE1 → GRAA SHFRSØ L

74S04 E66 pin 5 → DAPB AMXØØ H (BS1) → 74S10 E56 pin 10
74S10 E56 pin 8 → DV2 → GRAA AMXØ ✳ ASH L

IRCB OBD (ASRB+RORB) L (CK2) → 74S11 E65 pin 9
IRCB NEG.B L (CP1) → 74S11 E65 pin 10
74S11 E65 pin 8 → 74S20 E81 pin 9
GRAB OBD (1) H → 74S20 E81 pin 10
IRCD BYIN H (DF1) → 74S20 E81 pin 12
IRCC DSTMØ L (AP2) → 74S20 E81 pin 13
74S20 E81 pin 8 (EP1) → GRAA OB SWAP L

IRCH SWAB L (EV2) → 74S11 E65 pin 1
74S11 E65 pin 12 → GRAA SWAP L
74S04 E87 pin 1 → 74S04 E87 pin 2 → GRAA OB SWAP H

RACC UALUØ H (ER1) → 74S158 E9Ø B3
RACC UALU1 H (ER2) → B2
RACC UALU2 H (ES1) → B1
RACB USHFØ1 H (ET1) → BØ
GRAA SWAP L → SØ
STB → 15
A3 ← GRAA MODE H
A2 ← 74S11 E41 pin 12
A1 ← 74S04 E66 pin 12
AØ ← 74S04 E66 pin 10
F3 → FJ1 → GRAA ALUS3 L
F2 → FH2 → GRAA ALUS2 L
F1 → FF2 → GRAA ALUS1 L
FØ → FF1 → GRAA ALUSØ L

GRAA ROMS3 H → 74S11 E82 pin 13
GRAA ROMS2 H → IRCH SWAB L (EV2) → 74S11 E82 pin 9
74S11 E82 pin 12 → RACC UALU2 H (ES1)
74S11 E82 pin 8 → RACC UALU1 H (ER2)
GRAA ROMS1 H → RACC UALUØ H (ER1)
GRAA ROMSØ H

RACC UALUØ H (ER1) → 74S04 E66 pin 9 → 74S04 E66 pin 8 → AT2 → GRAA UALUØ L
RACC UALU1 H (ER2) → 74S00 E26 pin 13
RACC UALU2 H (ES1) → 74S00 E26 pin 12
74S00 E26 pin 11 → GRAA CIN L
74S64 E58 pin 8 → GRAA MODE H
74S04 E66 pin 11 → 74S04 E66 pin 10 → 74S11 E41 pin 1
74S04 E66 pin 13 → 74S04 E66 pin 12 → 74S11 E41 pin 2

RACC UALUØ H (ER1) → 74S11 E82 pin 3
RACC UALU1 H (ER2) → 74S11 E82 pin 4
74S11 E82 pin 6 → 74S10 E56 pin 1
RACC UALU2 H (ES1) → 74S10 E56 pin 2
74S10 E56 pin 12 → GRAA ALU INSDEP L
74S10 E56 pin 3 → 74S20 E64 pin 1
IRCB MOVB H (CJ1) → 74S20 E64 pin 5
74S20 E64 pin 6 (EL1) → GRAA SGNEX MOVB L

74S158 SØ: L A→F; H B→F

ALU & SHIFTER CONTROL LOGIC SLOT 7

| FIRST USED ON OPTION/MODEL | QTY. | DESCRIPTION | PART NO. | ITEM NO. |
|---|---|---|---|---|
| 11/45 | | PARTS LIST | | |

UNLESS OTHERWISE SPECIFIED DIMENSION IN INCHES. TOLERANCES
DECIMALS: .XXX ± .005, .XX ± .02, X ± .1 — ANGLES: ± 0° 30'
REMOVE BURRS AND BREAK SHARP CORNERS SURFACE QUALITY ✓
MATERIAL —
FINISH —

DRN. T. Sullivan DATE 6-23-71
CHK'D. DATE
ENG. DATE 2/23/72
PROJ. ENG. DATE 2/23/72
PROD. DATE 2-25-72
NEXT HIGHER ASSY. B-DD-KB11-0
SCALE —
SHEET 2 OF 10

digital EQUIPMENT CORPORATION MAYNARD MASSACHUSETTS

TITLE: GENERAL REGS & ALU CNTL (GRAA)

| SIZE | CODE | NUMBER | REV. |
|---|---|---|---|
| D | CS | M8101-Ø-1 | D |

DIST.

REVISIONS | REV | CHANGE NO | CHK

DEC FORM NO DRD 102-B

SIZE D | CODE CS | NUMBER M8101-Ø-1 | REV D

This drawing and specifications, herein, are the property of Digital Equipment Corporation and shall not be reproduced or copied or used in whole or in part as the basis for the manufacture or sale of items without written permission.

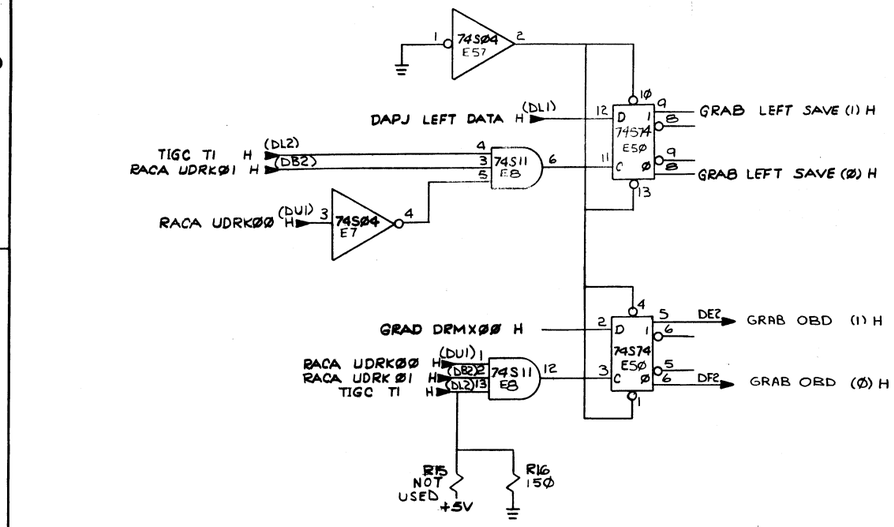


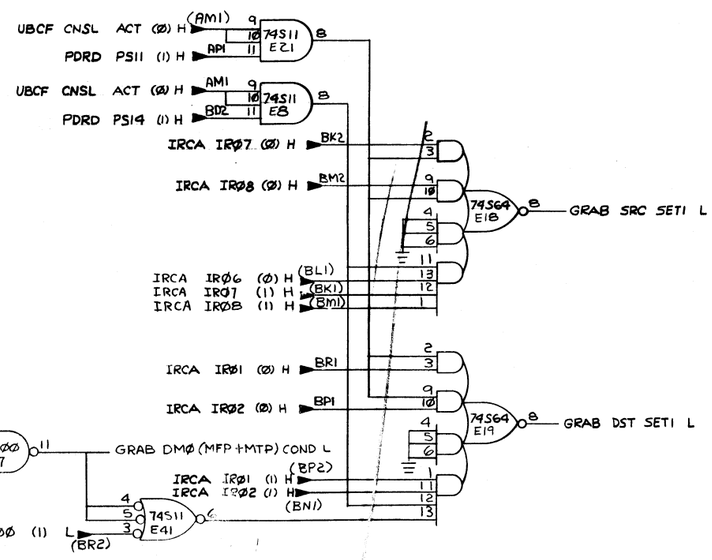


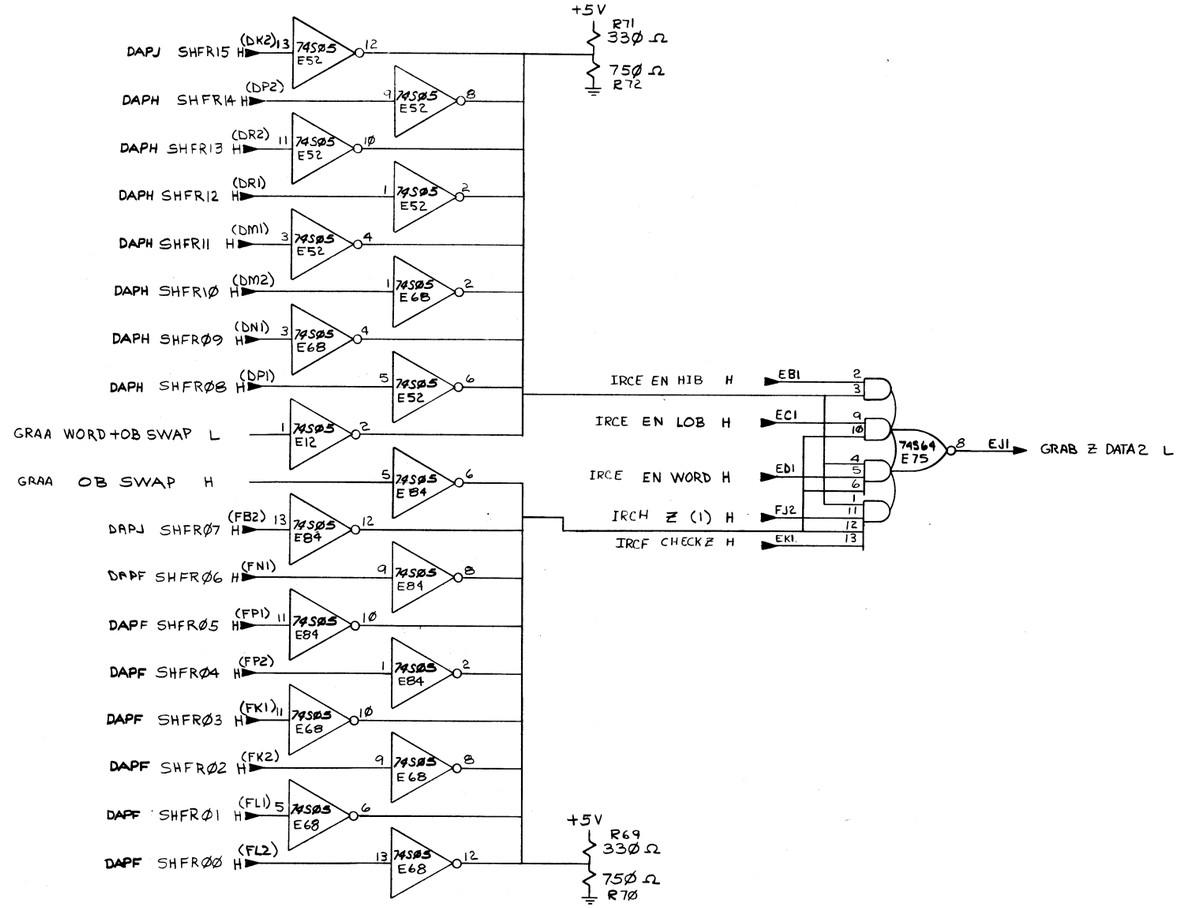


SHIFTER = Ø DETECTOR ; MSC. LOGIC — SLOT 7

| FIRST USED ON OPTION/MODEL | QTY. | DESCRIPTION | PART NO. | ITEM NO. |
|---|---|---|---|---|
| 11/45 | | PARTS LIST | | |

UNLESS OTHERWISE SPECIFIED DIMENSION IN INCHES. TOLERANCES

| DECIMALS | ANGLES |
|---|---|
| .XXX = .005 | ±0° 30' |
| .XX = .02 | |
| .X = .1 | |

REMOVE BURRS AND BREAK SHARP CORNERS SURFACE QUALITY ✓

MATERIAL —

FINISH —

| | | |
|---|---|---|
| DRN. Z Carberry | DATE 7-15-71 | digital EQUIPMENT CORPORATION MAYNARD MASSACHUSETTS |
| CHKD. | DATE | |
| ENG. Steve Fenderson | DATE 2/23/72 | TITLE |
| PROJ. ENG. Erik Erickson | DATE 2/23/72 | GENERAL REGS. & ALU CNTL (GRAB) |
| PROD. | DATE 7-15-71 | |

NEXT HIGHER ASSY. B-DD-KB11-D

SCALE —

SHEET 3 OF 10

| SIZE | CODE | NUMBER | REV. |
|---|---|---|---|
| D | CS | M8101-Ø-1 | D |

DIST.

REVISIONS | REV | CHANGE NO. | CHK

DEC FORM NO DRD 102-B

This drawing and specifications, herein, are the property of Digital Equipment Corporation and shall not be reproduced or copied or used in whole or in part as the basis for the manufacture or sale of items without written permission.



GRAC DMØ(MFP+MTP)COND H
RACB UPWEØØ H (CT2)
IRCC DMØ(MFP+MTP) H
GRAC GRAD EN L
RACB UPADØ1 H (AC1)
RACB UPADØ2 H (AB2)
74S11 E34
74S11 E34
RACB UPAD ØØ H AD1
74S04 E40
GRAC PADØØ L
STBI STBØ
74S153 E32
GDAM (2:1)
IRCA IRØ2 (I) H BN1
IRCA IRØB (I) H BM1
IRCA IRØ1 (I) H BP2
IRCA IRØ7 (I) H BK1
GRAC GDA2 H
GRAC GDAI H
RACB UPADØ1 H (AC1)
RACB UPADØØ H (AD1)
GRAC GRAD EN L
74S153 E33
GSAM (2:1)
GRAC GSA2 H
GRAC GSAI H
74SØ4 E39
GRAC +3V H
RACB UPADØ1 H AC1
RACB UPADØ2 H AB2
74S11 E34
74SØØ E17
GRAC PADØØ L
GRAC PLUS 1 L
IRCA IRØ6 (I) L BL1
GRAC PLUS 1 L
74S1Ø E15
IRCA IRØ8 (I) H (BM1)
IRCA IRØ7 (I) H (BK1)
PDRD PSI5 (I) H (BB2)
74S1Ø E15
UBCF CNSL ACT (Ø) L (BJ1)
IRCA IRØØ (I) L BR2
IRCD DSTF6 H DC1
74S04 E40
74S64 E35
PDRD PSI5 (I) L AR2
GRAB DMØ (MFP + MTP) COND L
PDRD PSI3 (I) L BU2
GRAC DMO(MFP+MTP) COND H

UBCF CNSL ACT (I) H BJ1
IRCA IRØ3 (I) H BL2
74SØØ E3
DK1
GRAC ACT * IRØ3 L
PDRD PSI2 (I) H CB2
IRCD DSTF6 H (DC1)
74S1Ø E2Ø
74S153 E23
PDRD PSI5 (I) H BB2
GRAC +3V H
GDAM (Ø)
PDRD PSI4 (I) L BD1
PDRD PSI1 (I) L BC1
GRAB DST SET1 L
GRAB SRC SET1 L
74S153 E24
GSAM (Ø)
GRAC GSAØ H
GRAC GSA1 H
74S1Ø E2Ø
GRAC GSREG SET 1 H
GRAC GDA2 H
GRAC GDA1 H
74S1Ø E15
BE1
GRAC GDG L
74S04 E39
GRAC GDAØ H
74S1Ø E2Ø
GRAC GDREG SET 1 H
NOT USED R41 R42 15Ø +5V
GRAC TG L
SSRA INH PWE L
TIGD T5 H
RACB UPWEØ1 H
IRCB BYIN * (-MOVB) L
RACB UPWEØØ H
IRCB ICLASS L (CJ2)
CS1 DS2 CS2 DE1 CT2
74S64 E48
74S04 E57
GRAC GRWE HIB L
74S64 E49
74S04 E57
GRAC GRWE LOB L
74S04 E40
TIGD T4 H DS1
NOT USED R60 R59 15Ø +5V
74S112 E63
TIGC TF H EM1
NOT USED R90 R89 15Ø +5V
EL2
GRAC GATE T6 H
74SØØ E88
DU2
GRAC T6 L
GRAC GSAØ H
74S04 E39
BE2
GRAC GRAØ L
GRAC GSA1 H
BF1
GRAC GRA1 L
GRAC GSA2 H
BF2
GRAC GRA2 L
GRAC GDREG SET 1 H
BH2
GRAC GRA3 L
IRCB SRCF7 L CH2
RACA USRXØØ H DH2
RACA USRXØ1 H CU1
74HSØ E47
GRAC SRMX SEL L
IRCC DSTF7 L DA1
RACA UDRXØØ H DJ1
RACA UDRXØ1 H DJ2
GRAC DRMX SEL L

GDAM

| UPAD | SI | SØ | ADDR OUTPUT |
|---|---|---|---|
| Ø | L | L | SF |
| 4 | L | L | SFVI |
| 1+5 | L | H | DF |
| 2 | H | L | 5 |
| 3+7 | H | H | 6 |

GSAM

| UPAD | SI | SØ | ADDR OUTPUT |
|---|---|---|---|
| Ø+1 | L | L | SF |
| 4 | L | L | SFVI |
| 5 | L | H | DF |
| 2+3 | H | L | 5 |
| 7 | H | H | 6 |

| UPWE Ø1 | ØØ | GRWE LOB | GRWE HIB |
|---|---|---|---|
| L | L | DON'T WRITE | DON'T WRITE |
| L | H | WRITE COND: I CLASS | WRITE COND: I CLASS + BYTE INST +MOVB (SIGN EXTENDED) |
| H | L | WRITE | WRITE |
| H | H | NOT USED | NOT USED |

| USRX | Ø1 | ØØ | OUTPUT (SRMX) |
|---|---|---|---|
| | L | L | SHFR |
| | L | H | GS |
| | H | L | SF7:SHFR ; $\overline{SF7}$:GS |
| | H | H | NOT USED |

| UDRX | Ø1 | ØØ | OUTPUT (DRMX) |
|---|---|---|---|
| | L | L | SHFR |
| | L | H | GD |
| | H | L | DF7:SHFR ; $\overline{DF7}$:GD |
| | H | H | CLEAR DR |

GENERAL REGS ADDR & WRITE PULSE CNTL SLOT 7

| FIRST USED ON OPTION/MODEL | QTY. | DESCRIPTION | PART NO. | ITEM NO. |
|---|---|---|---|---|
| 11/45 | | PARTS LIST | | |

UNLESS OTHERWISE SPECIFIED DIMENSION IN INCHES. TOLERANCES
DECIMALS .XXX = .005 .XX = .02 .X = .1 ANGLES ±0° 30'
REMOVE BURRS AND BREAK SHARP CORNERS SURFACE QUALITY

DRN. DATE 12/6/71
CHK'D. DATE
ENG. DATE 2/27/72
PROJ. ENG. DATE 2/27/72
PROD. DATE 2-25-72
MATERIAL
FINISH
NEXT HIGHER ASSY. B-DD-KB11-0
SCALE
SHEET 4 OF 10

digital EQUIPMENT CORPORATION MAYNARD MASSACHUSETTS

TITLE: GENERAL REGS & ALU CNTL (GRAC)

SIZE D | CODE CS | NUMBER M8101-Ø-1 | REV D
DIST.

REVISIONS | REV | CHANGE NO | CHK

BRUNING 40-522 15840
DEC FORM NO DRD 102-B

This drawing and specifications, herein, are the property of Digital Equipment Corporation and shall not be reproduced or copied or used in whole or in part as the basis for the manufacture or sale of items without written permission.

GRAC GRWE LOB L

31Ø1A E69 — GS (Ø3:ØØ)

DAPF SHFRØ3 H — FK1 — D3 — M3
DAPF SHFRØ2 H — FK2 — D2 — M2
DAPF SHFRØ1 H — FL1 — D1 — M1
DAPF SHFRØØ H — FL2 — DØ — MØ

+5V

R68 33Ø
R62 33Ø
R64 33Ø
R66 33Ø
68Ø R67
68Ø R61
68Ø R63
68Ø R65

A3 A2 A1 AØ

GRAC GSREG SET1 H
GRAC GSA2 H
GRAC GSA1 H
GRAC GSAØ H

74S158 E6Ø — SRMX (Ø3:ØØ)

B3 B2 B1 BØ — A3 A2 A1 AØ — STB SØ — F3 F2 F1 FØ

GRAC SRMX SEL L

GRAD GSØØ L
GRAD GSØ1 L
GRAD GSØ2 L
GRAD GSØ3 L

74S174 E59

GRAE SRMXØ5 H — D5 — R5 — EU1 — GRAD SRØ5 H
GRAE SRMXØ4 H — D4 — R4 — EP2 — GRAD SRØ4 H
D3 — R3 — EU2 — GRAD SRØ3 H
D2 SR (Ø5:ØØ) — R2 — EH2 — GRAD SRØ2 H
D1 — R1 — EK2 — GRAD SRØ1 H
DØ — RØ — ED2 — GRAD SRØØ H
CLR CLK

GRAE +3V H

RACA USRK H — CV2 — 74S11 E21
TIGC T1 H — DL2

GRAD CLKSR H

RACA UDRKØØ H — DU1
RACA UDRKØ1 H — DB2

GRAE DRØ4 H — DSØ — 74S194* E62 — DR (Ø3:ØØ)

D3 — R3 — EE1 — GRAD DRØ3 H
D2 — R2 — EU2 — GRAD DRØ2 H
D1 — R1 — EF1 — GRAD DRØ1 H
DØ — RØ — EF2 — GRAD DRØØ H
DS3 — DI — DAPJ LEFT DATA H
CLR CLK

RACA UDRXØØ H — (DU1)
RACA UDRXØ1 H — (DU2)
GRAJ TP(3:5) H — 74S1Ø E22

GRAD CLRDR L

TIGC TIB L — RBI — 74SØØ E3
R5 NOT USED
RG 15Ø
+5V
TIGD T3 L — (AL2)

GRAD CLKDR H

GRAC GDREG SET1 H
GRAC GDA2 H
GRAC GDA1 H
GRAC GDAØ H

74S194 E67 — GRAC GRWE LOB L

31Ø1A E7Ø — GD (Ø3:ØØ)

+5V

R52 33Ø
R56 33Ø
R54 33Ø
R58 33Ø
68Ø R51
68Ø R55
68Ø R53
68Ø R57

A3 A2 A1 AØ

74S158 E61 — DRMX (Ø3:ØØ)

B3 B2 B1 BØ — A3 A2 A1 AØ — STB SØ — F3 F2 F1 FØ

GRAD DRMXØØ H

GRAC DRMX SEL L

| 74S194 S1 | SØ | |
|---|---|---|
| L | L | NO-OP |
| L | H | SHIFT RIGHT (DSØ) |
| H | L | SHIFT LEFT (DS3) |
| H | H | LOAD |

| 74S158 SØ | OUTPUT |
|---|---|
| L | A → F |
| H | B → F |

NOTE:
* EARLY MACHINES HAVE 74194-1

REVISIONS | REV | CHANGE NO. | CHK

GS, GD, SRMX, DRMX, DR, (Ø3:ØØ) & SR (Ø5:ØØ) SLOT 7

| FIRST USED ON OPTION/MODEL | QTY. | DESCRIPTION | PART NO. | ITEM NO. |
|---|---|---|---|---|
| 11/45 | | PARTS LIST | | |

UNLESS OTHERWISE SPECIFIED DIMENSION IN INCHES. TOLERANCES
DECIMALS: .XXX = .005, .XX = .02, .X = .1 — ANGLES: ±0° 30'
REMOVE BURRS AND BREAK SHARP CORNERS SURFACE QUALITY ✓
MATERIAL
FINISH

DRN. [illegible] DATE 7-13-71
CHK'D. [illegible] DATE
ENG. [illegible] DATE 2/27/72
PROJ. ENG. [illegible] DATE 2/27/72
PROD. [illegible] DATE 2-25-72
NEXT HIGHER ASSY. B-DD-KB11-J
SCALE
SHEET 5 OF 10

digital EQUIPMENT CORPORATION MAYNARD MASSACHUSETTS

TITLE: GENERAL REGS. & ALU. CNTL (GRAD)

SIZE D | CODE CS | NUMBER M8101-Ø-1 | REV. D
DIST.

DEC FORM NO DRD 102-B

This drawing and specifications, herein, are the property of Digital Equipment Corporation and shall not be reproduced or copied or used in whole or in part as the basis for the manufacture or sale of items without written permission.



GRAC GRWE LOB L

3101A E85 — GS (Ø7:Ø4)

DAPJ SHFRØ7 H (FB2) → D3 → M3
DAPF SHFRØ6 H (FN1) → D2 → M2
DAPF SHFRØ5 H (FP1) → D1 → M1
DAPF SHFRØ4 H (FP2) → DØ → MØ

+5V
R88 330Ω
R87 680Ω
R82 330Ω
R81 680Ω
R84 330Ω
R83 680Ω
R86 330Ω
R85 680Ω

A3 A2 A1 AØ ← GRAC GSREG SETI H, GRAC GSA2 H, GRAC GSA1 H, GRAC GSAØ H

74S158 E76 — SRMX (Ø7:Ø4)

GRAE GSØ7 L → B3 → F3 → GRAE SRMXØ7 H
GRAE GSØ6 L → B2 → F2 → GRAE SRMXØ6 H
GRAE GSØ5 L → B1 → F1 → GRAE SRMXØ5 H
GRAE GSØ4 L → BØ → FØ → GRAE SRMXØ4 H
STB SØ
GRAC SRMX SEL L

74S04 E87

GRAH SRI5 L
GRAD SRØØ H
74S64 E8Ø → GRAE SR LEQ ZERO H
74S74 E79
GRAD CLKSR H
74S74 E79
74S10 E22 → BV2 → GRAE SR EQ ONE L

GRAE +3V H
GRAD GSØ1 L
GRAD GSØ2 L
GRAD GSØ3 L
GRAE GSØ4 L
GRAE GSØ5 L
GRAE GSØ6 L
GRAE GSØ7 L
74H3Ø E72

GRAF GSØ8 L
GRAF GSØ9 L
GRAF GS1Ø L
GRAF GS11 L
GRAH GS12 L
GRAH GS13 L
GRAH GS14 L
GRAH GS15 L
74H3Ø E55

RACA UDRKØØ H (DU1)
RACA UDRKØ1 H (DB2)
GRAF DRØ8 H

*74S194 E78 — DR (Ø7:Ø4)

DS3 CLR CLK
GRAD DRØ9 H
GRAD CLRDR L
GRAD CLKDR H

FV2 → GRAE DRØ7 H
FU2 → GRAE DRØ6 H
FU1 → GRAE DRØ5 H
FA1 → GRAE DRØ4 H

74S04 E83 → GRAE +3V H

GRAC GDREG SETI H
GRAC GDA2 H
GRAC GDA1 H
GRAC GDAØ H

3101A E86 — GD (Ø7:Ø4)

74S158 E77 — DRMX (Ø7:Ø4)

GRAC DRMX SEL L

NOTE:
* EARLY MACHINES HAVE 74194-1

REVISIONS | REV | CHANGE NO. | CHK

GS, GD, SRMX, DRMX, DR (Ø7:Ø4) & SR LEQ ZERO DET. SLOT 7

| FIRST USED ON OPTION/MODEL | QTY. | DESCRIPTION | PART NO. | ITEM NO. |
|---|---|---|---|---|
| 11/45 | | PARTS LIST | | |

UNLESS OTHERWISE SPECIFIED DIMENSION IN INCHES. TOLERANCES
DECIMALS .XXX ± .005, .XX ± .02, .X ± .1 | ANGLES ± 0° 30'
REMOVE BURRS AND BREAK SHARP CORNERS SURFACE QUALITY ✓
MATERIAL —
FINISH —

DRN. S.W.Roberts DATE 7/15/71
CHK'D DATE
ENG. Steve Hutchins DATE 2/23/72
PROJ. ENG. Erik Erikson DATE 2/23/72
PROD. DATE

digital EQUIPMENT CORPORATION MAYNARD MASSACHUSETTS

TITLE: GENERAL REGS. & ALU CNTL (GRAE)

NEXT HIGHER ASSY. B-DD-KB11-D
SIZE D | CODE CS | NUMBER M8101-0-1 | REV D
SCALE —
SHEET 6 OF 10 | DIST.

DEC FORM NO DRD 102-B

This drawing and specifications, herein, are the property of Digital Equipment Corporation and shall not be reproduced or copied or used in whole or in part as the basis for the manufacture or sale of items without written permission.

GRAC GRWE HIB L

3101 A E37 — W, CS

DAPH SHFR11 H (DM1) → D3 → M3
DAPH SHFR10 H (DM2) → D2 → M2
DAPH SHFR09 H (DN1) → D1 → M1
DAPH SHFR08 H (DP1) → D0 → M0

GS (11:08)

A3 A2 A1 A0

GRAC GSREG SET1 H
GRAC GSA2 H
GRAC GSA1 H
GRAC GSA0 H

+5V

R32 330
R31 680
R26 330
R25 680
R28 330
R27 680
R30 330
R29 680

74S158 E29 — SRMX (11:08)

GRAC SRMX SEL L

GRAF GS08 L
GRAF GS09 L
GRAF GS10 L
GRAF GS11 L

74S174 E28 — SR (11:06)

GRAE SRMX07 H
GRAE SRMX06 H
GRAE +3V H
GRAD CLKSR H

GRAF SR11 H
GRAF SR10 H
GRAF SR09 H
GRAF SR08 H
GRAF SR07 H
GRAF SR06 H

74S04 E36

GRAC GRWE HIB L

3101 A E38 — W, CS

GD (11:08)

A3 A2 A1 A0

GRAC GDREG SET1 H
GRAC GDA2 H
GRAC GDA1 H
GRAC GDA0 H

+5V

R18 330
R17 680
R22 330
R21 680
R20 330
R19 680
R24 330
R23 680

74S158 E30 — DRMX (11:08)

GRAC DRMX SEL L

RACA UDRK00 H (DU1)
RACA UDRK01 H (DB2)

GRAH DR12 H

74S194* E31 — DR (11:08)

GRAE DR07 H

GRAD CLRDR L
GRAD CLKDR H

GRAF DR11 H
GRAF DR10 H
GRAF DR09 H
GRAF DR08 H

NOTE:
* EARLY MACHINES HAVE 74194-1

GS, GD, SRMX, DRMX, DR (11:08) & SR (11:06) SLOT 7

| FIRST USED ON OPTION/MODEL | QTY. | DESCRIPTION | PART NO. | ITEM NO. |
|---|---|---|---|---|
| 11/45 | | PARTS LIST | | |

UNLESS OTHERWISE SPECIFIED DIMENSION IN INCHES. TOLERANCES
DECIMALS: .XXX = .005, .XX = .02, .X = .1 — ANGLES: ±0° 30'
REMOVE BURRS AND BREAK SHARP CORNERS SURFACE QUALITY ✓
MATERIAL —//—
FINISH —//—

DRN. — DATE 7-14-11
CHKD — DATE 7-14-72
ENG. — DATE 2/24/72
PROJ. ENG. — DATE 2/24/72
PROD. — DATE 2-24-72
NEXT HIGHER ASSY. B-DD-KB11-D
SCALE —//—
SHEET 7 OF 10

digital EQUIPMENT CORPORATION MAYNARD MASSACHUSETTS

TITLE: GENERAL REGS & ALU CNTL (GRAF)

SIZE D | CODE CS | NUMBER M8101-0-1 | REV. D | DIST.

REVISIONS | REV | CHANGE NO | CHK

DEC FORM NO DRD 102-B

This drawing and specifications, herein, are the property of Digital Equipment Corporation and shall not be reproduced or copied or used in whole or in part as the basis for the manufacture or sale of items without written permission.



GRAC GRWE HIB L

+5V

3101A E53 — GS (15:12)

DAPJ SHFR15 H (DK2) → D3 → M3
DAPH SHFR14 H (DP2) → D2 → M2
DAPH SHFR13 H (DR2) → D1 → M1
DAPH SHFR12 H (DR1) → D0 → M0

R50 330Ω
R49 680Ω
R44 330Ω
R43 680Ω
R46 330Ω
R45 680Ω
R48 330Ω
R47 680Ω

A3 A2 A1 A0

GRAC GSREG SET1 H
GRAC GSA2 H
GRAC GSA1 H
GRAC GSA0 H

74S04 E51 ×4

GRAC GRWE HIB L

3101A E54 — GD (15:12)

R34 330Ω
R33 680Ω
R38 330Ω
R37 680Ω
R36 330Ω
R35 680Ω
R40 330Ω
R39 680Ω

GRAC GDREG SET1 H
GRAC GDA2 H
GRAC GDA1 H
GRAC GDA0 H

74S158 E44 — SRMX (15:12)

GRAC SRMX SEL L

GRAH GS12 L
GRAH GS13 L
GRAH GS14 L
GRAH GS15 L

74S174 E43 — SR (15:12)

GRAE +3V H
GRAD CLKSR H

74S04 E51

GRAH SR15 L
DT2 GRAH SR15 H
DD2 GRAH SR14 H
DD1 GRAH SR13 H
DB1 GRAH SR12 H

74S158 E45 — DRMX (15:12)

GRAC DRMX SEL L

RACA UDRK00 H (DU1)
RACA UDRK01 H (DB2)

DAPF ALU00 H → ENI 2

74S194* E46 — DR (15:12)

74S04 E87

GRAH DR15 L
GRAH DR15 H
GRAH DR14 H
GRAH DR13 H
GRAH DR12 H

GRAF DR11 H

GRAD CLRDR L
GRAD CLKDR H

NOTE:
* EARLY MACHINES HAVE 74194-1

REVISIONS | REV | CHANGE NO | CHK

GS, GD, SRMX, DRMX, SR & DR (15:12) SLOT 7

| FIRST USED ON OPTION/MODEL | QTY. | DESCRIPTION | PART NO. | ITEM NO. |
|---|---|---|---|---|
| 11/45 | PARTS LIST | | | |

UNLESS OTHERWISE SPECIFIED DIMENSION IN INCHES. TOLERANCES
DECIMALS .XXX = .005 .XX = .02 .X = .1 | ANGLES ±0° 30'
REMOVE BURRS AND BREAK SHARP CORNERS SURFACE QUALITY ✓

DRN. [illegible] DATE 7-15-71
CHK'D. [illegible] DATE
ENG. [illegible] DATE 12/23/72
PROJ. ENG. [illegible] DATE 1/29/72
PROD. [illegible] DATE 6-25-73

MATERIAL —
FINISH —

NEXT HIGHER ASSY. B-DD-KB11-0
SCALE —
SHEET 8 OF 10

digital EQUIPMENT CORPORATION MAYNARD MASSACHUSETTS

TITLE: GENERAL REGS & ALU CNTL (GRAH)

SIZE D | CODE CS | NUMBER M8101-0-1 | REV. D
DIST.

DEC FORM NO DRD 102-B

This drawing and specifications, herein, are the property of Digital Equipment Corporation and shall not be reproduced or copied or used in whole or in part as the basis for the manufacture or sale of items without written permission.

RACC USHC ØØ L
GRAE DRØ5 H
GRAE DRØ4 H
GRAJ TP(3:5) H
RACC USHC Ø1 H
RACC USHC ØØ H
GRAD DRØ3 H
GRAD DRØ2 H
GRAD DRØ1 H
GRAD DRØØ H
TIGD T3 L
TIGD T5 L
UBCE INIT L
RACC USHC ØØ H
GRAJ LDSC L
GRAJ SCØ5 L
RACC USHC Ø1 H
GRAJ SCØ5 L
GRAJ SCØ4 H
GRAJ SC=Ø L
GRAJ SCØ3 H
GRAJ SCØ2 H
GRAJ SCØ1 H
GRAJ SCØØ H
GRAJ TP(3:5) H
+5V
GRAH SR15 L
GRAB LEFT SAVE (1) H
GRAH SR15 H
GRAB LEFT SAVE (Ø) H
GRAJ DIV SUB L
IRCF E2 (Ø) H
GRAB LEFT SAVE (1) H
IRCH N (1) H
GRAH SR15 H
IRCH N (Ø) H
GRAH SR15 L
GRAJ DIV QUIT L
IRCH C (1) H
IRCB PCLASS H
GRAA ALU INSDEP L
IRCB ICLASS L
GRAH SR15 L
GRAA ALU INSDEP L
GRAE SR LEQ ZERO H
GRAJ SHFR DATA H

| USHC Ø1 | ØØ |
|---|---|
| L | L NO COUNT |
| L | H COUNT |
| H | L LOAD (DR) |
| H | H LOAD (17) |

SHIFT COUNT REG (SC) SLOT 7

| FIRST USED ON OPTION/MODEL | QTY. | DESCRIPTION | PART NO. | ITEM NO. |
|---|---|---|---|---|
| 11/45 | | PARTS LIST | | |

UNLESS OTHERWISE SPECIFIED DIMENSION IN INCHES. TOLERANCES
DECIMALS: .XXX = .005, .XX = .02, .X = .1 — ANGLES: ±0° 30'
REMOVE BURRS AND BREAK SHARP CORNERS SURFACE QUALITY
MATERIAL
FINISH

DRN. DATE 12/10/71
CHK'D DATE
ENG. DATE 2/22/72
PROJ. ENG. DATE 2/22/72
PROD. DATE

digital EQUIPMENT CORPORATION MAYNARD MASSACHUSETTS

TITLE: GENERAL REGS & ALU CNTL (GRAJ)

NEXT HIGHER ASSY. B-DD-KB11-O

SIZE D | CODE CS | NUMBER M8101-0-1 | REV. D

SCALE
SHEET 9 OF 10
DIST.

| REV | REVISIONS | CHANGE NO | CHK |
|---|---|---|---|
| | | | |

RRUNING 40-522 15840

DEC FORM NO DRD 102-B

This drawing and specifications, herein, are the property of Digital Equipment Corporation and shall not be reproduced or copied or used in whole or in part as the basis for the manufacture or sale of items without written permission.

| INSTRUCTION | OCTAL ADDRESS |
|---|---|
| ROR.B | 00 |
| ROL.B | 01 |
| ASR.B | 02 |
| ASL.B | 03 |
| MARK | 04 |
| MFP | 05 |
| MTP | 06 |
| SXT | 07 |
| CLR.B | 10 |
| COM.B | 11 |
| INC.B | 12 |
| DEC.B | 13 |
| NEG.B | 14 |
| ADC.B | 15 |
| SBC.B | 16 |
| TST.B | 17 |
| SUB | 20 |
| MOV.B | 21 |
| CMP.B | 22 |
| BIT.B | 23 |
| BIC.B | 24 |
| BIS.B | 25 |
| ADD | 26 |
| ——— | 27 |
| MUL | 30 |
| DIV | 31 |
| ASH | 32 |
| ASHC | 33 |
| XOR | 34 |
| ——— | 35 |
| ——— | 36 |
| SOB | 37 |

ALU CNTL ROM
DM8598-AD

| ROMM | ROMC | ROMSHFS1 | ROMSHFS0 | ROMS3 | ROMS2 | ROMS1 | ROMS0 |
|---|---|---|---|---|---|---|---|
| M7 | M6 | M5 | M4 | M3 | M2 | M1 | M0 |
| L | L | H | H | L | L | L | L |
| H | H | H | L | H | H | L | L |
| L | L | H | H | L | L | L | L |
| L | L | H | L | H | H | L | L |
| L | L | L | L | L | L | L | L |
| H | L | H | L | H | L | H | L |
| H | L | H | L | H | L | H | L |
| H | L | H | L | L | L | H | H |
| H | L | H | L | L | L | H | H |
| H | L | H | L | L | L | L | L |
| L | H | H | L | L | L | L | L |
| L | L | H | L | H | H | H | H |
| H | L | H | L | L | L | L | L |
| H | H | H | L | L | L | L | L |
| H | H | H | L | H | H | H | H |
| L | L | H | L | L | L | L | L |
| L | H | H | L | L | H | H | L |
| H | L | H | L | H | L | H | L |
| L | L | H | L | L | H | H | L |
| H | L | H | L | H | L | H | H |
| H | L | H | L | L | H | H | H |
| H | L | H | L | H | H | H | L |
| L | L | H | L | H | L | L | H |
| L | L | L | L | L | L | L | L |
| L | H | H | H | L | H | H | L |
| L | H | H | L | H | H | L | L |
| L | L | L | H | L | L | L | L |
| L | H | H | L | H | H | L | L |
| H | L | H | L | L | H | H | L |
| L | L | L | L | L | L | L | L |
| L | L | L | L | L | L | L | L |
| L | L | L | L | L | L | L | L |

SWAB

| INSTRUCTION DEP. ALU FUNCTION (RACC UALU (2:0)=7) |
|---|
| F=A |
| F=A PLUS A PLUS CBIT |
| F=A |
| F=A PLUS A |
| NOT INST. DEP. |
| F=B |
| F=B |
| N: F=MINUS 1 ; N: F=0 |
| F=0 |
| F=$\overline{A}$ |
| F=A PLUS 1 |
| F=A MINUS 1 |
| F=$\overline{A}$ |
| F=A PLUS C BIT |
| F=A MINUS C BIT |
| F=A |
| F=A MINUS B |
| F=B |
| F=A MINUS B MINUS 1 |
| F=AB |
| F=AB |
| F=A+B |
| F=A PLUS B |
| ——— |
| F=A MINUS B |
| F=A PLUS A PLUS DR15 |
| NOT INST. DEP. |
| F=A PLUS A PLUS DR15 |
| F=A ¥ B |
| ——— |
| ——— |
| NOT INST. DEP. |
| F=A |

| INSTRUCTION DEP. SHFR FUNCTION (RACC UALU (2:0)=7) |
|---|
| RIGHT SHIFT |
| NO - SHIFT ** |
| RIGHT SHIFT |
| NO - SHIFT ** |
| NOT INST. DEP. |
| NO - SHIFT |
| NO - SHIFT |
| NO - SHIFT |
| NO - SHIFT ** |
| NO - SHIFT ** |
| NO - SHIFT ** |
| NO - SHIFT ** |
| NO - SHIFT |
| NO - SHIFT ** |
| NO - SHIFT ** |
| NO-- SHIFT ** |
| NO - SHIFT |
| NO - SHIFT ** |
| NO - SHIFT ** |
| NO - SHIFT ** |
| NO - SHIFT ** |
| NO - SHIFT |
| ——— |
| RIGHT SHIFT |
| NO - SHIFT |
| NOT INST. DEP. * |
| NO - SHIFT |
| NO - SHIFT |
| ——— |
| ——— |
| NOT INST. DEP. |
| SWAP BYTES |

NOTE: SWAB INST. HAS SAME ROM ADDRESS AS ASL.B
*ROMSHF OUTPUTS USED TO DECODE ASH
**ODD BYTE*BYTE INSTR: SWAP BYTES

ALU CNTL ROM MAP — SLOT 7

| FIRST USED ON OPTION/MODEL | QTY. | DESCRIPTION | PART NO. | ITEM NO. |
|---|---|---|---|---|
| 11/45 | | PARTS LIST | | |

UNLESS OTHERWISE SPECIFIED DIMENSION IN INCHES. TOLERANCES
DECIMALS: .XXX = .005, .XX = .02, .X = .1 — ANGLES: ±0° 30'
REMOVE BURRS AND BREAK SHARP CORNERS SURFACE QUALITY ✓
MATERIAL
FINISH

DRN. — DATE 1-23-81
CHK. — DATE 2-2-81
ENG. — DATE 2/3/81
PROJ ENG. — DATE 2/11/81
PROD. — DATE 2/25/81

NEXT HIGHER ASSY. B-DD-KB11D
SCALE NONE
SHEET 10 OF 10

digital EQUIPMENT CORPORATION MAYNARD MASSACHUSETTS

TITLE: GENERAL REGS. & ALU CNTL (GRAK)

| SIZE | CODE | NUMBER | REV. |
|---|---|---|---|
| D | CS | M8101-0-1 | D |

DIST.

REVISIONS | REV | CHANGE NO | CHK

BRUNING 40-522 15840
DEC FORM NO. DRD 102-B

This drawing and specifications, herein, are the property of Digital Equipment Corporation and shall not be reproduced or copied or used in whole or part as the basis for the manufacture or sale of items without written permission.

UNLESS OTHERWISE NOTED RESISTANCE IS IN Ω AND CAPACITANCE IS IN PICOFARADS. CAPS WITHOUT VALUE NOTED ARE .01 MFD.

RESISTORS R1, R16, R19 ARE NOT USED.

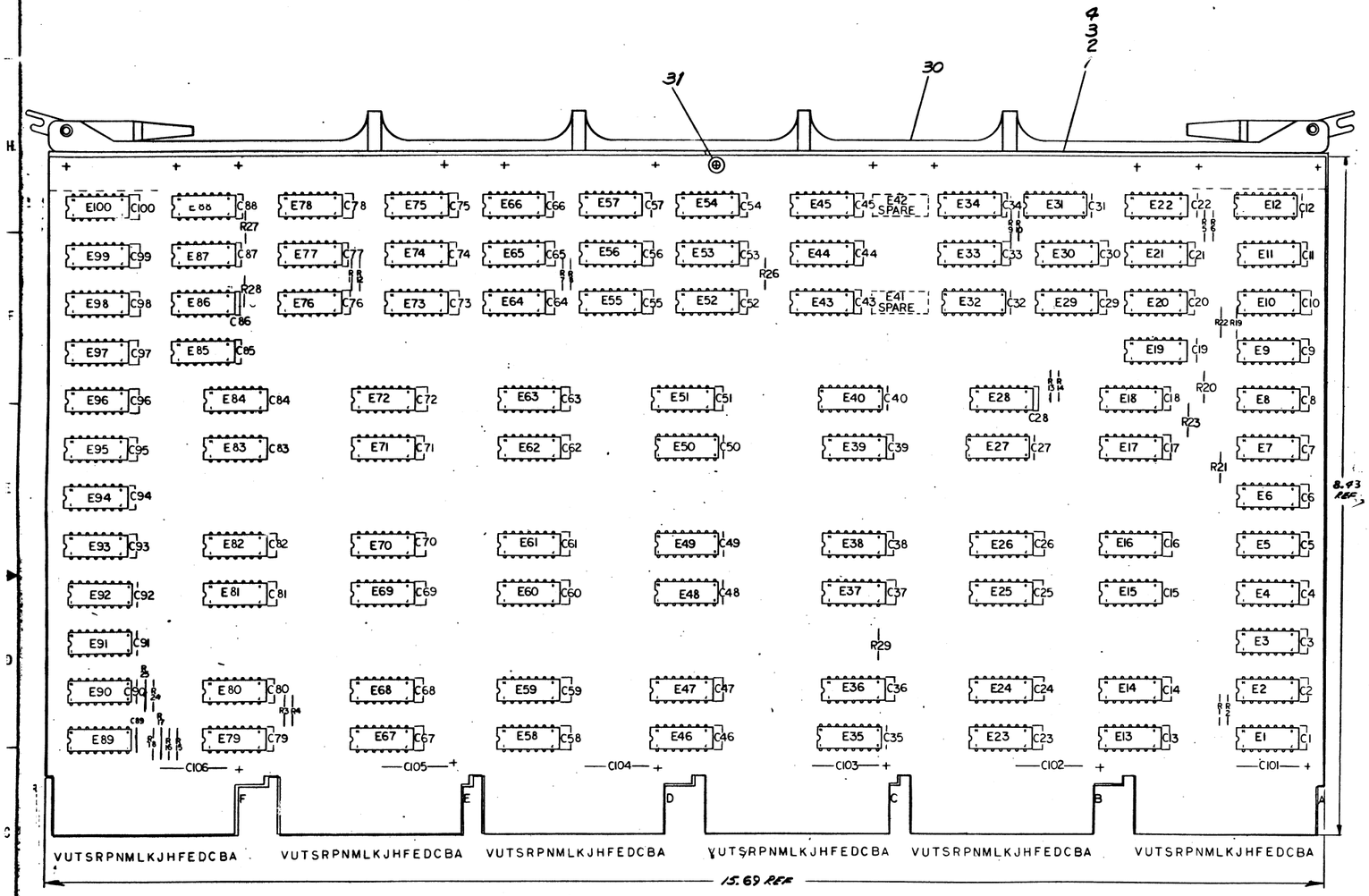


AA2, AW1, BA2, BW1,
CA2, CW1, DA2, DW1,
EA2, EW1, FA2, FW1

AC2, AN2, AH1, AT1,
BC2, BN2, BH1, BT1,
CC2, CN2, CH1, CT1,
DC2, DN2, DH1, DT1,
EC2, EN2, EH1, ET1,
FC2, FN2, FH1, FT1

+5V — 6.8 MF — C101 THRU C106 — .01 MF — C1 THRU C90, C93 THRU C100 — GND

| IC TYPE | GND | +5V |
|---|---|---|
| DM 8598-AC | 8 | 16 |
| DM 8598-AB | 8 | 16 |
| DEC 8881-1 | 8 | 16 |
| DEC 74S153 | 8 | 16 |
| DEC 74S157 | 8 | 16 |

GND AND 5V ARE USUALLY PIN 7 AND 16 RESPECTIVELY EXCEPTIONS ARE STATED ABOVE

IC PIN LOCATIONS

| ITEM NO. | AWG | FROM PT | TO PT |
|---|---|---|---|

JUMPER LIST

| QTY | REF DESIGNATION | DESCRIPTION | PART NO. | ITEM NO. |
|---|---|---|---|---|
| 12 | | EYELET | 9006732 | 31 |
| 1 | | HANDLE, MODULE | 69-12107-2 | 30 |
| 1 | E30 | I.C. DM 8598-AC | 23-C82A1 | 29 |
| 1 | E89 | I.C. DM 8598-AB | 23-C81A1 | 28 |
| 2 | E44, E69 | I.C. DEC 8885 | 19/0649 | 27 |
| 1 | E87 | I.C. DEC 8875 | 19/0647 | 26 |
| 5 | E37, E32, E48, E93, E50 | I.C. DEC 8881-1 | 1909884 | 25 |
| 3 | E51, E80, E85 | I.C. DEC 74H50 | 1909060 | 24 |
| 2 | E35, E90 | I.C. DEC 74S157 | 19/0548 | 23 |
| 4 | E18, E31, E91, E32 | I.C. DEC 74S153 | 19/0547 | 22 |
| 11 | E3, E14, E20, E46, E23, E29, E33, E36, E73, E78, E39 | I.C. DEC 74S74 | 19/0544 | 21 |
| 5 | E10, E59, E37, E65, E66 | I.C. DEC 74S65 | 19/0543 | 20 |
| 10 | E1, E5, E61, E63, E77, E81, E82, E83, E89, E88 | I.C. DEC 74S64 | 19/0542 | 19 |
| 1 | E2 | I.C. DEC 74S40 | 19/0541 | 18 |
| 6 | E7, E9, E18, E31, E76, E36 | I.C. DEC 74S20 | 19/0539 | 17 |
| 16 | E4, E6, E10, E22, E28, E96, E56, E59, E60, E71, E72, E75, E76, E78, E86, E99 | I.C. DEC. 74S11 | 19/0537 | 16 |
| 9 | E29, E38, E18, E33, E58, E91, E96, E39, E100 | I.C. DEC 74S10 | 19/0536 | 15 |
| 8 | E3, E17, E30, E98, E68, E87, E37 E95 | I.C DEC 74S09 | 19/0534 | 14 |
| 1 | E34 | I.C. DEC 74S03 | 19/0533 | 13 |
| 12 | E8, E11, E19, E21, E36, E31, E39, E28, E35, E61, E64, E38 | I.C. DEC 74S00 | 19/0532 | 12 |
| 5 | R1 THRU R19 | RES. 1K, ¼ W, 5% | 1300365 | 11 |
| 4 | R3, R6, R7, R10 | RES. 560, ¼ W, 5% | 1301890 | 10 |
| 10 | R20 THRU R29 | RES. 470, ¼ W, 5% | 1300316 | 9 |
| 4 | R4, R5, R8, R9 | RES. 330, ¼ W, 5% | 1300295 | 8 |
| 3 | R2, R11, R13 | RES. 150, ¼ W, 5% | 1300250 | 7 |
| 98 | C1 THRU C40, C43 THRU C100 | CAP. .01 MFD, 100V, 20% DISC | 100/610 | 6 |
| 6 | C101 THRU C106 | CAP. 6.8 MFD, 35V, 20% TANT | 1000067 | 5 |
| 1 | | ETCHED CIRCUIT BOARD | 5003806 | 4 |
| REV | | MODULE ECO HISTORY | D-HH-M8102-0-6 | 3 |
| REV | | INSTALLATION HOLE LAYOUT | C-AH-M8102-0-5 | 2 |
| REV | | X-Y COORDINATE HOLE LOCATION | C-CO-M8102-0-9 | 1 |

PARTS LIST

ETCH BOARD REV C

| REVISIONS | CHG. | CHANGE NO. | REV |
|---|---|---|---|
| J. JENKINS 7/27/72 | | | |
| B. HAILE | | M8102-00002 | C |
| J. JENKINS 3/14/72 | | M8102-00001 | B |
| ORIGINATED | | | A |

| DEC NO | EIA NO | DEC NO | EIA NO |
|---|---|---|---|

SEMICONDUCTOR CONVERSION CHART

| | | DATE |
|---|---|---|
| DRAWN | | 7-27-72 |
| CHK'D | | 7/31/72 |
| ENG | | |
| PROJ ENG | | |
| PROD | | |

NEXT HIGHER ASSY: E-PO-KB11-D

SCALE 2/1 SHEET 1 OF 2

DIGITAL EQUIPMENT CORPORATION MAYNARD MASSACHUSETTS

TITLE: IR DECODE # COND. CODES

SIZE E | CODE | NUMBER: CS M8102-0-1 | REV. C

DIST

CS M8102-0-1

This drawing and specifications, herein, are the property of Digital Equipment Corporation and shall not be reproduced or copied or used in whole or in part as the basis for the manufacture or sale of items without written permission.



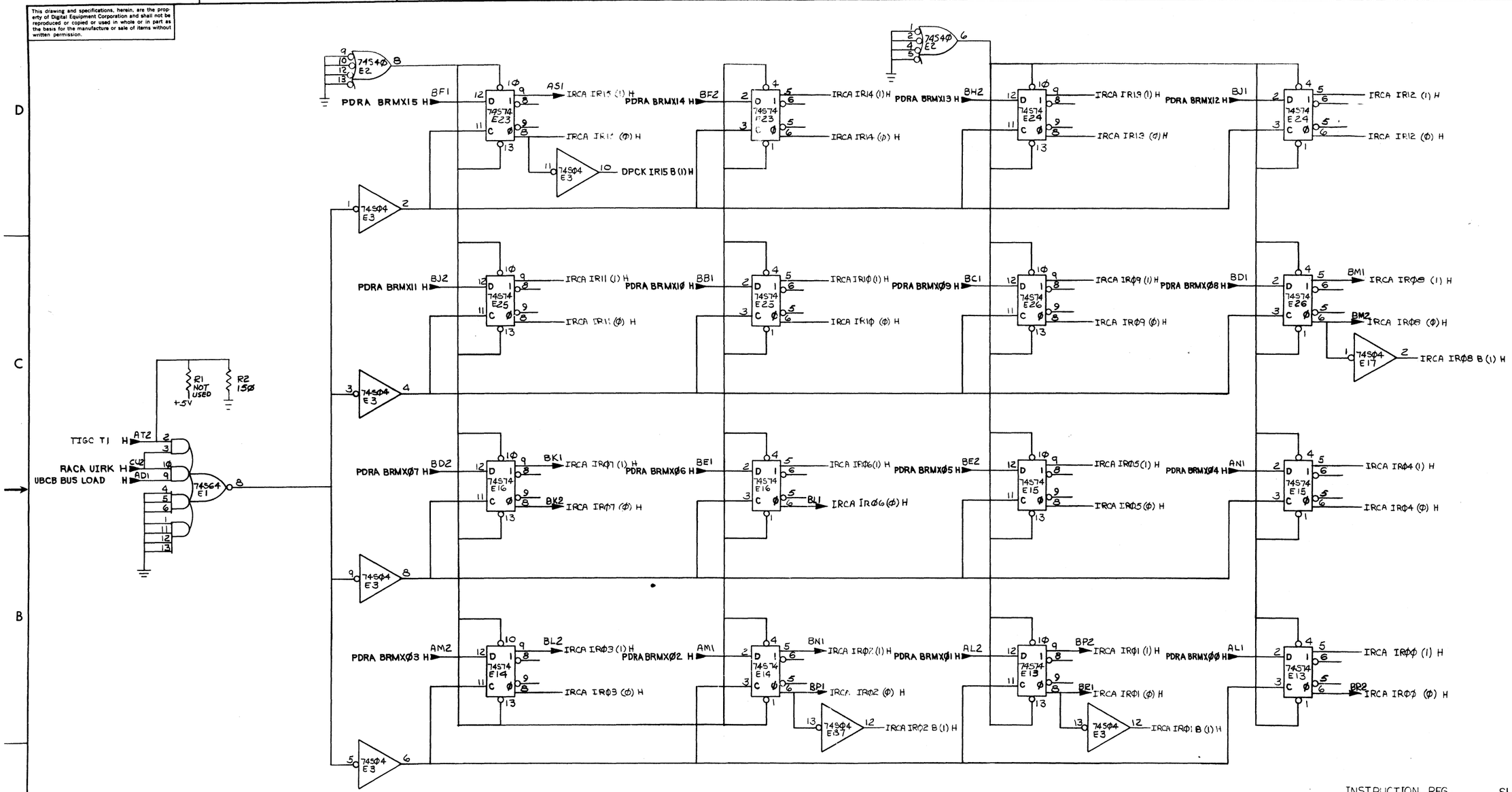


INSTRUCTION REG. SLOT 8

| FIRST USED ON OPTION/MODEL | QTY. | DESCRIPTION | PART NO. | ITEM NO. |
|---|---|---|---|---|
| 11/45 | | PARTS LIST | | |

UNLESS OTHERWISE SPECIFIED DIMENSION IN INCHES. TOLERANCES

| DECIMALS | ANGLES |
|---|---|
| .XXX = .005<br>.XX = .02<br>.X = .1 | ±0° 30' |

REMOVE BURRS AND BREAK SHARP CORNERS SURFACE QUALITY ✓

MATERIAL —

FINISH —

| | | |
|---|---|---|
| DRN. S.W. Roberts | DATE 6/24/71 | digital EQUIPMENT CORPORATION MAYNARD MASSACHUSETTS |
| CHK'D. | DATE 2/18/72 | |
| ENG. | DATE 2/18/72 | |
| PROJ. ENG. FRANK ERICKSON | DATE 2/18/72 | |
| PROD. | DATE 2/23/72 | |
| NEXT HIGHER ASSY. B-DD-KB11-0 | | |
| SCALE — | | |
| SHEET 2 OF 9 | | |

TITLE: IR DECODE & COND. CODES (IRCA)

SIZE D | CODE CS | NUMBER M8102-Ø-1 | REV. C | DIST.

REVISIONS | REV | CHANGE NO | CHK

DEC FORM NO DRD 102-B

This drawing and specifications, herein, are the property of Digital Equipment Corporation and shall not be reproduced or copied or used in whole or in part as the basis for the manufacture or sale of items without written permission.

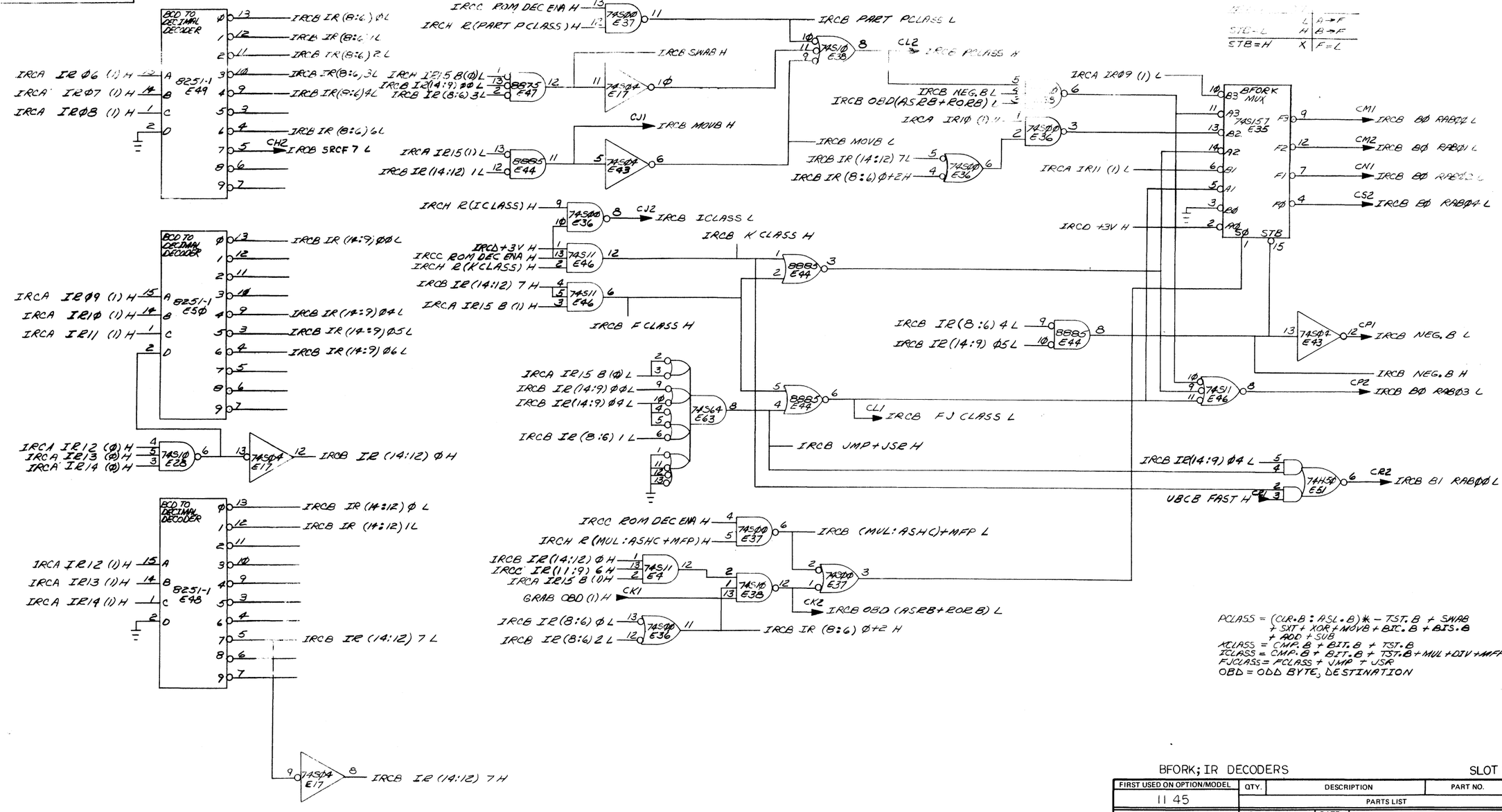


BFORK; IR DECODERS — SLOT 8

| FIRST USED ON OPTION/MODEL | QTY. | DESCRIPTION | PART NO. | ITEM NO. |
|---|---|---|---|---|
| 1145 | PARTS LIST | | | |

UNLESS OTHERWISE SPECIFIED DIMENSION IN INCHES. TOLERANCES
DECIMALS: .XXX = .005, .XX = .02, .X = .1 — ANGLES: ±0° 30'
REMOVE BURRS AND BREAK SHARP CORNERS SURFACE QUALITY ✓
MATERIAL —
FINISH —

| | | |
|---|---|---|
| DRN. | DATE | 6/27/72 |
| CHK'D | DATE | 7/10/72 |
| ENG. | DATE | 2/15/72 |
| PROJ. ENG. ERIK ERICKSEN | DATE | 1/17/72 |
| PROD. | DATE | 2/23/72 |

NEXT HIGHER ASSY. B-DD-KB11-J
SCALE —
SHEET 3 OF 9

digital EQUIPMENT CORPORATION MAYNARD MASSACHUSETTS

TITLE: IR DECODE & COND. CODES (IRCB)

SIZE D | CODE CS | NUMBER M8102-Ø-1 | REV. C | DIST.

REVISIONS: REV. | CHANGE NO | CHK

DEC FORM NO DRD 102-B

This drawing and specifications, herein, are the property of Digital Equipment Corporation and shall not be reproduced or copied or used in whole or in part as the basis for the manufacture or sale of items without written permission.



GRAD SRØØ H — AK2 — CFORK MUX

IRCA IRØ5(1)L, IRCA IRØ3(1)L, IRCA IRØ4(1)H → 74S00 E39 → 74S00 E39

IRCA IRØ5(1)L → CSI → IRCC DSTF7 L

IRCA IRØØ(1)H, IRCA IRØ1(1)H, IRCA IRØ2(1)H, GRAC ACT#IRØ3 L, CAI → 74S20 E7 → 74S04 E43

74S00 E39 → IRCC DSTMØ L

IRCB F CLASS H → 74S04 E43 → IRCC FCLASS L

74S157 E40

| 74S157 | SØ | OUTPUT |
|---|---|---|
| | L | A→F |
| | H | B→F |

| | | |
|---|---|---|
| B3 | 10 | |
| A3 | 11 | |
| B2 | 13 | |
| A2 | 14 | |
| B1 | 6 | |
| A1 | 5 | |
| B0 | 3 | |
| A0 | 2 | |
| SØ | 1 | |
| STB | 15 | |
| F3 | 9 | DPI — IRCC CØ RAB ØØ L |
| F2 | 12 | ENI — IRCC CØ RAB Ø1 L |
| F1 | 7 | DEI — IRCC CØ RAB Ø2 L |
| F0 | 4 | DP2 — IRCC CØ RAB Ø3 L |

IRCA IR15(Ø) H, IRCB IR(14:12) 7 H → 74S00 E8

IRCB IR(14:9) Ø5L, IRCB IR(14:9) Ø6 L, IRCH BIN L → 74S20 E7 → IRCC ROM DEC ENA H

IRCC DSTMØ H → 74S11 E6 → BS2 IRCC DMØ (MFP+MTP) H

IRCD +3V H, IRCH R(MFP+MTP) H → 74S11 E6 → BT2 IRCC MFP+MTP H

IRCB PART P CLASS L, BAI, GRAA UALUØ L → 74S00 E8 → 74S11 E6 → BU1 IRCC (ROR.B+MUL) H

IRCH R(ROR.B+MUL) H → R23 470Ω → +5V

IRCD SBYN H, IRCB IR(8:6)G L, IRCB SRCF7 L → 74S11 E4 → 74S11 E4 → AV2 IRCC SRCCON←1 H (SM24*SBYN*+SFG7)

IRCC SRCM2 L, IRCC SRCM4 L → 74S00 E8

IRCC SRCM7 L, IRCC SRCM5 L, IRCC SRCM3 L → 74S10 E28 → BU2 IRCC SM357 H

IRCA IRØ8 B(1) H, IRCA IRØ7(1) H, IRCD SBYN H → 74S20 E18

IRCD WDIN H → 74S00 E8

IRCC SRCM3 L, IRCC SRCM5 L → 74S20 E18 → BS1 IRCC SRCCON←2 H [SM35+SM24(WDIN+SBYN*SFG7)]

IRCA IR15 B(Ø) L, IRCB IR(14:9) Ø6 L, IRCB IR(14:12) 1 L, IRCB IR(8:6)G L → 74S64 E5 → AU1 IRCC OCLASS H → 74S04 E17 → AU2 IRCC OCLASS L

IRCA IRØ9(1)H, IRCA IR1Ø(1)H, IRCA IR11(1)H → 8251-1 E27 (BCD TO DECIMAL DECODER)

| | |
|---|---|
| Ø | IRCC SRCMØ L |
| 1 | |
| 2 | IRCC SRCM2 L |
| 3 | IRCC SRCM3 L |
| 4 | IRCC SRCM4 L |
| 5 | IRCC SRCM5 L |
| 6 | |
| 7 | IRCC SRCM7 L |
| 8 | |
| 9 | |

4 → 74S04 E17 → IRCC IR(11:9)6 H

IRCC DSTMØ L → 74S04 E43 → ES1 IRCC DSTMØ H

DE2 IRCC DSTM2 L

IRCA IRØ3(1)H, IRCA IRØ4(1)H, IRCA IRØ5(1)H → 8251-1 E32 (BCD TO DECIMAL DECODER)

| | |
|---|---|
| Ø | |
| 1 | |
| 2 | |
| 3 | IRCC DSTM3 L |
| 4 | IRCC DSTM4 L |
| 5 | IRCC DSTM5 L |
| 6 | |
| 7 | IRCC DSTM7 L |
| 8 | |
| 9 | |

NOTE: OCLASS = MOV+MTP
SBYN = MOVB+CMPB+BITB+BICB+BISB
SRØØ = OBS (OLD BYTE, SOURCE)
FCLASS = FPU OPCODES

CFORK; IR DECODERS; SOURCE CONSTANTS — SLOT 8

| | | | |
|---|---|---|---|
| FIRST USED ON OPTION/MODEL: 11/45 | QTY. | DESCRIPTION | PART NO. / ITEM NO. |
| | | PARTS LIST | |

UNLESS OTHERWISE SPECIFIED DIMENSION IN INCHES. TOLERANCES: DECIMALS .XXX = .005, .XX = .02, .X = .1; ANGLES ±0° 30'. REMOVE BURRS AND BREAK SHARP CORNERS. SURFACE QUALITY ✓

MATERIAL — FINISH

| | | |
|---|---|---|
| DRN. | DATE 6-23-71 | digital EQUIPMENT CORPORATION MAYNARD MASSACHUSETTS |
| CHKD | DATE 6/10/72 | |
| ENG. | DATE 6/16/72 | TITLE: IR DECODE & COND. CODES (IRCC) |
| PROJ. ENG. ERIK ERIKSEN | DATE 2/10/72 | |
| PROD. | DATE 2/23/72 | |
| NEXT HIGHER ASSY. B-DD-KB11-D | | SIZE D CODE CS NUMBER M8102-0-1 REV C |
| SCALE — | | |
| SHEET 4 OF 9 | | DIST. |

REVISIONS | REV | CHANGE NO | CHK

DEC FORM NO DRD 102-B

This drawing and specifications, herein, are the property of Digital Equipment Corporation and shall not be reproduced or copied or used in whole or in part as the basis for the manufacture or sale of items without written permission.

IRCC DSTM3 L
IRCA DSTM5 L
IRCC DSTM7 L
74S10 E28
DD2
IRCD DM357 H

IRCB MOVB L
IRCD BYINA H
74S00 E62
DE1
IRCD BYIN*(-MOVB)L

74S04 E43
IRCD +3V H

IRCB IR(14:12)Ø H
IRCC IR(11:9) 6 H
74S20 E70
74S11 E59
IRCA IR15 B(Ø)L
IRCA IR14 (1) H
IRCA IR13 (1) H
IRCA IR12 (Ø) H
74S10 E58
IRCC FCLASS L
IRCB IR(14:9)Ø5 L
IRCB IR(14:9)Ø6 L
IRCA IR15 (1) H
74S00 E62
74S11 E71
IRCD WDIN H
74S11 E72
DF2
IRCD BYIN H
74S11 E72
IRCD SBYN H
74S11 E72
IRCD BYINA H
IRCD BYINA H
IRCD DSTF67 H
IRCC DSTM2 L
IRCC DSTM4 L
74H30 E51
74S11 E71
DK1
IRCD DSTCON←1 H
DM24*BYIN*(-DF67)

IRCA IRØ2(1) H
IRCD +3V H
IRCA IRØ1(1) H
74S11 E29
IRCD DSTF67 H

IRCC DSTM3 L
IRCC DSTM5 L
IRCD WDIN H
74S00 E62
IRCD BYINA H
IRCC DSTM2 L
IRCC DSTM4 L
74S00 E62
(DD1)
FXPE AD2 H
IRCB FCLASS H
74S64 E61
DJ2
74S04 E68
IRCD DSTCON←2 H
DM35+(FCLASS*ADI*AD2)+DM2*[WDIN+(BYIN*DF67)]
IRCD DSTM24 H

IRCB IR(14:9)Ø4 L
74S04 E68
IRCA IRØ8 (Ø) H
TMCB TRAP INH L
IRCA IRØ8 B(1) H
IRCA IR15 (1) H
DK2
74S20 E67
DM1
IRCD EMT L
74S20 E67
BV2
IRCD TRAP L

IRCC SRCMØ L
74S04 E68
IRCB IR(8:6)Ø L
74S04 E68
IRCB IR(14:12)Ø H
IRCA IRØ2 (Ø) H
IRCA IRØ1 B(1) H
IRCA IRØØ (1) H
74S11 E6Ø
IRCA IRØ2 B(1) H
IRCA IRØ1 (Ø) H
IRCA IRØØ (Ø) H
74S11 E6Ø
IRCA IR15 (Ø) H
IRCC DSTMØ H
74S11 E59
IRCA IRØ2 B(1) H
IRCA IRØ1 B(1) H
IRCA IRØØ (Ø) H
74S11 E6Ø
74S10 E58
DL1
IRCD OPCODE3 L
74S10 E58
DM2
IRCD IOT L
74S00 E37
DN1
IRCD RTT L
DC1
IRCD DSTF6 H

FXPE AD1 H
DB1
IRCB FCLASS H
IRCC DSTF7 L
IRCD DSTM24 H
74S20 E70
FXPE AD2 H
DD1
74S04 E68
74S04 E68
8885 E69
DJ1
IRCD DSTCON←4 H
(-AD2)*(ADI)*FCLASS*DM24*(-DF7)
8885 E69
DH2
IRCD DSTCON←10 H
(-AD2)*(-ADI)*FCLASS*DM24*(-DF7)

INSTRUCTION TRAPS & DESTINATION CONSTANTS — SLOT 8

| FIRST USED ON OPTION/MODEL | QTY. | DESCRIPTION | PART NO. | ITEM NO. |
|---|---|---|---|---|
| 11/45 | | PARTS LIST | | |

UNLESS OTHERWISE SPECIFIED DIMENSION IN INCHES. TOLERANCES
DECIMALS: .XXX = .005, .XX = .02, .X = .1 — ANGLES: ±0° 30'
REMOVE BURRS AND BREAK SHARP CORNERS SURFACE QUALITY ✓
MATERIAL
FINISH

DRN. — DATE 6/23/71
CHKD. — DATE
ENG. — DATE
PROJ. ENG. ERIK ERIKSEN — DATE 7/6/72
PROD. — DATE 6/30/72

digital EQUIPMENT CORPORATION MAYNARD MASSACHUSETTS

TITLE: IR DECCLE & COND. CODES (IRCD)

NEXT HIGHER ASSY. B-DD-KB11-D
SCALE
SHEET 5 OF 9

SIZE D | CODE CS MSIØ2-Ø-1 | REV. C
DIST.

REVISIONS: REV. | CHANGE NO | CHK

DEC FORM NO DRD 102-B

This drawing and specifications, herein, are the property of Digital Equipment Corporation and shall not be reproduced or copied or used in whole or in part as the basis for the manufacture or sale of items without written permission.

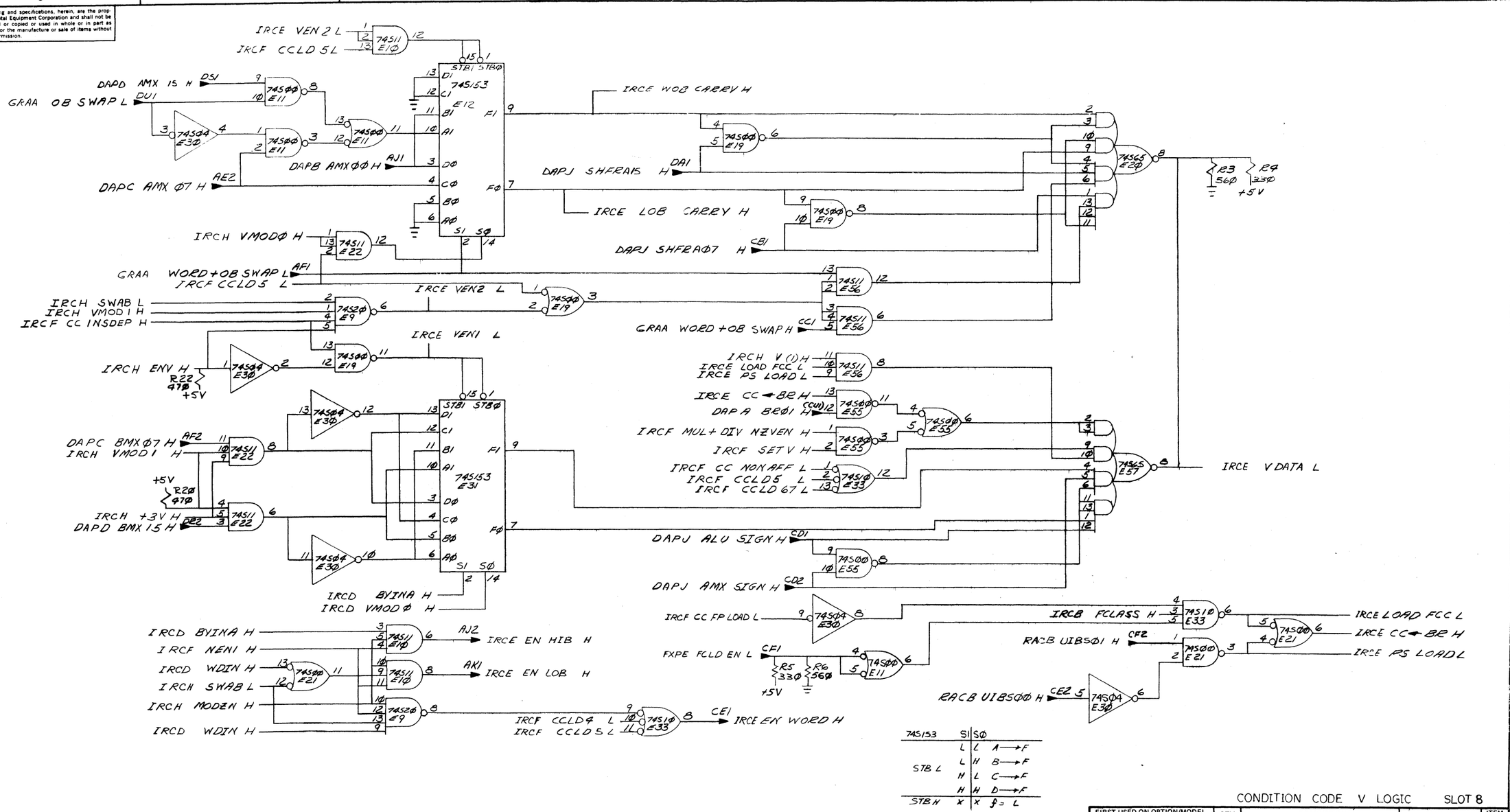


| 74S153 | S1 | S0 | |
|---|---|---|---|
| STB L | L | L | A → F |
| | L | H | B → F |
| | H | L | C → F |
| | H | H | D → F |
| STB H | X | X | F = L |

CONDITION CODE V LOGIC SLOT 8

| FIRST USED ON OPTION/MODEL | QTY. | DESCRIPTION | PART NO. | ITEM NO. |
|---|---|---|---|---|
| 11/45 | | PARTS LIST | | |

UNLESS OTHERWISE SPECIFIED DIMENSION IN INCHES. TOLERANCES
DECIMALS .XXX = .005 .XX = .02 .X = .1 ANGLES ±0° 30'
REMOVE BURRS AND BREAK SHARP CORNERS SURFACE QUALITY ✓
MATERIAL
FINISH

DRN. K. Davis DATE 6/17/71
CHK'D DATE 7/16/71
ENG. DATE 8/17/71
PROJ. ENG. ERIK ERIKSEN DATE 8/15/71
PROD. DATE 2/23/72

digital EQUIPMENT CORPORATION MAYNARD MASSACHUSETTS

TITLE
IR DECODE & COND. CODES
(IRCE)

NEXT HIGHER ASSY. B-DD-KB11-0
SCALE
SHEET 6 OF 9

| SIZE | CODE | NUMBER | REV. |
|---|---|---|---|
| D | CS | M 8102-0-1 | C |

DIST.

REVISIONS | REV | CHANGE NO | CHK

DEC FORM NO DRD 102-B

This drawing and specifications, herein, are the property of Digital Equipment Corporation and shall not be reproduced or copied or used in whole or in part as the basis for the manufacture or sale of items without written permission.

IRCE WOB CARRY H
IRCE LOB CARRY H
GRAA AMXØ * ASH L (EB1)
DAPJ ALUCN L (EC1)
IRCF CC.. Y L
IRCH CMODI H
IRCF CC INSDEPA H
IRCH CMODZ H
IRCF CEN.. H
IRCH ENC H
R28 470Ω +5V
IRCE CC←BR H
IRCH CMOD1 H
IRCF CC NONAFF L
IRCF CCLD6 L
DAPA BRØØ H (CT2)
IRCE PS LOAD L
IRCH C(1) H
IRCE LOAD FCC L
IRCF CEN2 H
R27 470Ω +5V
GRAH DR15 L (ED1)
IRCH Z(1) H
GRAH DR15 H (ED2)
IRCF BR=-1 SAVE(1) H
GRAD DRØØ H (CV2)
IRCF X L
IRCH CMODØ H
IRCF CCLD7 L
IRCF CCLD67 L
IRCF CCLD6 L
IRCF CCLØØ L
IRCF CCLØ2 L
IRCF CCLD5 L
IRCF CC INSDEP H
IRCF CCLD4 L
IRCF CCFP LOAD L
IRCF CC INSDEPA H
RACA UCCLØ2 H (EF1)
RACA UCCLØ1 H (EE2)
RACA UCCLØØ H (EE1)
IRCF C DATA L
+5V R8 33Ω R7 56Ω
IRCF CC NONAFF L

IRCF CC INSDEP H
+5V R26 470Ω
IRCH ENZN H
IRCF CCLD4 L
IRCF CC NONAFF L
IRCF CCLD67 L
IRCE PS LOAD L
IRCE LOAD FCC L
IRCH N(1) H
GRAA WORD+OB SWAP L (AF1)
IRCH SWAB L
DAPJ SHFRAØ7 H (CB1)
IRCF CCLD4 L
IRCF CCLD5 L
IRCH MODEN H
DAPJ SHFRA15 H (DA1)
GRAA WORD+OB SWAP H (CC1)
+5V R19 1K
IRCH MODEN H
IRCF ZINV H
DAPF A=B(15:Ø) L (EH2)
IRCH +3V H
IRCF BR=1 SAVE(1) H
IRCF BR=1 SAVE(Ø) H
IRCH ZSET L
IRCF ZDATA1 L
IRCF Z1(1) H
IRCF Z1(Ø) H
GRAB ZDATA2 L (EJ1)
IRCF Z2(1) H (EJ2)
IRCH CCCLK H
IRCH ZCLR L
IRCF ZZ(Ø) H (DT2)
IRCF CC NONAFF L

IRCF CCLD4 L
+5V R9 330Ω R10 560Ω
DAPA BR03 H (DV2)
IRCE CC←BR H
IRCF N DATA L
IRCH MODEN H
IRCF SETYH
IRCF MUL+DIV NZVEN H
IRCF CCLD7 L
IRCF CC NONAFF L
DAPA BR02 H (DU2)
IRCE CC←BR H
IRCF NENI H
IRCF ZINV H
DAPJ A=B(15:8)+BYTE H (EK2)
DAPF A=B(7:Ø) H (EL1)
IRCH Z(1) H
IRCE LOAD FCC L
IRCE PS LOAD L
IRCF ZDATA1 L

CONDITION CODES C, N, Z LOGIC — SLOT 8

| FIRST USED ON OPTION/MODEL | QTY. | DESCRIPTION | PART NO. | ITEM NO. |
|---|---|---|---|---|
| 11/45 | | PARTS LIST | | |

UNLESS OTHERWISE SPECIFIED DIMENSION IN INCHES. TOLERANCES
DECIMALS: .XXX = .005, .XX = .02, .X = .1 — ANGLES: ±0° 30'
REMOVE BURRS AND BREAK SHARP CORNERS SURFACE QUALITY
MATERIAL
FINISH

DRN. — DATE
CHKD — DATE 2/11/72
ENG. — DATE
PROJ. ENG. — DATE
PROD. — DATE 2/23/72
NEXT HIGHER ASSY. B-DD-KBTF-D
SCALE
SHEET 7 OF 9

digital EQUIPMENT CORPORATION MAYNARD MASS. CHUSETTS

TITLE: IR DECODE & COND. CODES (IRCF)

| SIZE | CODE | NUMBER | REV. |
|---|---|---|---|
| D | CS | M8102-Ø-1 | C |

DIST.

REVISIONS: REV | CHANGE NO | CHK

DEC FORM NO. DRD 102-B

This drawing and specifications, herein, are the property of Digital Equipment Corporation and shall not be reproduced or copied or used in whole or in part as the basis for the manufacture or sale of items without written permission.



IRCH SETCC H

IRCA IRØ3 (1) H
DAPA BRØ3 H
UBCC CC DATA (1) H
DV2
ER2
74H5Ø E85

IRCA IRØ2 B(1) H
DAPA BRØ2 H
DU2
74H5Ø E85
IRCH . Z SET L

IRCA IRØ1 B(1) H
DAPA BRØ1 H
CU1
74H5Ø E8Ø

IRCA IRØØ (1) H
DAPA BRØØ H
CT2
74H5Ø E8Ø

IRCF NDATA L
74S74 E94
FC1
IRCH N (1) H
FD1
IRCH N (Ø) H

IRCE Z1 (1) L
IRCE Z2 (1) L
74S4Ø E93
FF2
1K R15
FE1
IRCH Z (1) H
IRCH MAT Z H
IRCH Z (1) H
74S04 E97
FH2
IRCH Z (Ø) H

IRCE VDATA L
74S74 E79
1K R16
FF1
IRCH MAT V H
FJ1
IRCH V(1) H
FJ2
IRCH V(Ø) H

IRCF CDATA L
74S74 E79
FK2
IRCH C(1) H
FB1
IRCH C(Ø) H

R12 NOT USED
R11 150
+5V
74S11 E76
IRCH CCCLK H

IRCH CLK INH L
GRAC GATE T6 H
TIGC TF H
EL2
EM1
74S11 E76

IRCH +3V H
UBCE INIT H
UBCC CCDATA (1) H
EM2
(ER2)
74S11 E76

PDRB BRØ3 B L
IRCA IRØ3 (1) H
EF2
74S64 E84

PDRB BRØ2 B L
IRCA IRØ2 B(1) H
EU1
74S64 E83

PDRB BRØ1 B L
IRCH Z CLR L
IRCA IRØ1 B(1) H
ET2
74S64 E82

PDRB BRØØ B L
IRCA IRØØ (1) H
ES2
74S64 E81

IRCA IRØ4 (1) H
R14 NOT USED
R13 150
+5V
TIGD TSB H
IRCA IRØ4 (Ø) H
DS2
74S11 E29
IRCH SETCC H

IRCF CCLØ3 L
RACA UCCLØ1 H
IRCF CCLØ2 L
(ER2)
74S11 E86
74S04 E87
IRCH CLK INH L

IRCH N (1) L
74S04 E87
R17 1K
FK1
IRCH MAT N H
FM1
IRCH N B (1) H

IRCH C (1) L
74S04 E87
R18 1K
FL1
IRCH MAT C H
FL2
IRCH C B (1) H

IRCA IR15 (1) H
IRCA IR14 (1) H
IRCA IR13 (1) H
IRCA IR12 (Ø) H
74S2Ø E96
IRCH SUB L

74S04 E97
IRCH +3V H

IRCA IRØ7 (1) H
IRCA IR1Ø (1) H
IRCA IR13 (1) H
IRCA IRØ6 (1) H
IRCA IRØ9 (1) H
IRCA IR12 (1) H
74S153 E92
STB1 STBØ
DI C1 B1 A1 DØ CØ BØ AØ
S1 SØ
F1 FØ

IRCA IRØ9 (1) H
IRCH +3V H
IRCA IRØB (1) H
IRCA IR11 (1) H
IRCA IR14 (1) H
74S153 E91
STB1 STBØ
DI C1 B1 A1 DØ CØ BØ AØ
S1 SØ
F1 FØ

IRCH BIN L

IRCA IR14 (Ø) H
IRCA IR13 (Ø) H
IRCA IR12 (Ø) H
74S1Ø E95
74S4Ø E93

IRCA IR14 (1) H
IRCA IR13 (1) H
IRCA IR12 (1) H
74S1Ø E95

RACC UALUØ H
RACC UALU1 H
RACC UALU2 H
EP1
EP2
EU2
74S11 E71

IRCA IR11 (Ø) H
IRCH BIN L
74S2Ø E96
ER1
IRCH SWAB L

74S153 | S1 | SØ
L | L | A → F
L | H | B → F
H | L | C → F
H | H | D → F
STB=L
STB=H | X | X | F = L

CS DM8598 AC A4 E89 23-CØ2A1 A3 A2 A1 AØ
CC CNTL ROM
M7 M6 M5 M4 M3 M2 M1 MØ
IRCH MODEN H
IRCH ENZN H
IRCH CMODI H
IRCH CMODØ H
IRCH ENC H
IRCH VMODI H
IRCH VMODØ H
IRCH ENV H

+5V +5V
R25 47Ø
R24 47Ø
CS DM8598 AB E89 23-CØ1A1 A3 A2 A1 AØ
INSTR DECODE ROM
FM2
IRCH SXT H
FN1
IRCH DIV+ASHC H
IRCH R(ROR.B+MUL) H
IRCH R(MFP+MTP) H
IRCH R(MUL:ASHC+MFP) H
IRCH R(KCLASS) H
FP1
IRCH R(ICLASS) H
IRCH R(PART PCLASS) H
R29 47Ø
+5V
FR1
IRCH SUBRCMA4 H
FR2
IRCH SUBRCMA3 H
FS1
IRCH SUBRCMA2 H
FS2
IRCH SUBRCMA1 H
FT2
IRCH SUBRCMAØ H

COND. CODE BITS; CC CNTL & INSTR DECODE ROMS SLOT 8

| FIRST USED ON OPTION/MODEL | QTY. | DESCRIPTION | PART NO. | ITEM NO. |
|---|---|---|---|---|
| 11/45 | | PARTS LIST | | |

UNLESS OTHERWISE SPECIFIED DIMENSION IN INCHES. TOLERANCES
DECIMALS: XXX = .005, .XX = .02, .X = .1 | ANGLES: ±0° 30'
REMOVE BURRS AND BREAK SHARP CORNERS SURFACE QUALITY ✓
MATERIAL
FINISH

DRN. | DATE 23JUN71
CHK. | DATE 21/12/72
ENG. | DATE 21/12/72
PROJ. ENG. | DATE 2/1/72
PROD. | DATE 2/23/73
NEXT HIGHER ASSY. B-DD-KB11-0
SCALE
SHEET 8 OF 9

digital EQUIPMENT CORPORATION MAYNARD MASSACHUSETTS

TITLE: IR DECODE & COND. CODES (IRCH)

SIZE D | CODE CS | NUMBER M 8102-0-1 | REV. C
DIST.

REVISIONS | REV. | CHANGE NO. | CHK

DEC FORM NO. DRD 102-B

This drawing and specifications, herein, is the property of Digital Equipment Corporation and shall not be reproduced or copied or used in whole or in part as the basis for the manufacture or sale of items without written permission.

| INSTRUCTION | OCTAL ADDRESS |
|---|---|
| ROR.B | 00 |
| ROL.B | 01 |
| ASR.B | 02 |
| ASL.B | 03 |
| MARK | 04 |
| MFP | 05 |
| MTP | 06 |
| SXT | 07 |
| CLR.B | 10 |
| COM.B | 11 |
| INC.B | 12 |
| DEC.B | 13 |
| NEG.B | 14 |
| ADC.B | 15 |
| SBC.B | 16 |
| TST.B | 17 |
| SUB | 20 |
| MOV.B | 21 |
| CMP.B | 22 |
| BIT.B | 23 |
| BIC.B | 24 |
| BIS.B | 25 |
| ADD | 26 |
| NOT USED | 27 |
| MUL | 30 |
| DIV | 31 |
| ASH | 32 |
| ASHC | 33 |
| XOR | 34 |
| NOT USED | 35 |
| NOT USED | 36 |
| SOB | 37 |

## INSTRUCTION DECODE ROM DM8598/AB

| SXT | DIV*ASNC | R(ROB.B*MUL) | R(MFP+MTP) | R(MUL:ASHC+MFP) | R(X CLASS) | R(1 CLASS) | R(PART P CLASS) |
|---|---|---|---|---|---|---|---|
| M7 | M6 | M5 | M4 | M3 | M2 | M1 | M0 |
| H | H | H | L | L | L | L | H |
| L | L | L | L | L | L | L | H |
| L | L | L | L | L | L | L | H |
| H | H | L | L | L | L | L | H |
| L | L | L | H | H | L | H | L |
| L | L | L | H | L | L | L | L |
| H | H | H | L | L | L | L | H |
| L | L | L | L | L | L | L | H |
| L | L | L | L | L | L | L | H |
| L | L | L | L | L | L | L | H |
| L | L | L | L | L | L | L | H |
| L | L | L | L | L | L | L | H |
| L | L | L | L | L | L | H | H |
| L | L | L | L | L | H | H | L |
| L | L | L | L | L | L | L | L |
| L | L | H | L | H | L | H | L |
| L | H | L | L | H | L | H | L |
| L | L | L | L | H | L | L | L |
| L | H | L | L | H | L | L | L |
| L | L | L | L | L | L | L | L |
| L | L | L | L | L | L | L | L |
| L | L | L | L | L | L | L | L |

## COND. CODE CNTL. ROM DM8598/AC

| MOD ZN | EN ZN | CMOD 1 | CMOD 0 | ENC | VMOD 1 | VMOD0 | ENV |
|---|---|---|---|---|---|---|---|
| M7 | M6 | M5 | M4 | M3 | M2 | M1 | M0 |
| H | H | L | L | L | H | H | H |
| H | H | L | L | L | H | L | H |
| H | H | L | L | L | H | H | H |
| H | H | L | L | L | H | L | H |
| L | L | L | L | L | L | L | L |
| H | H | H | L | H | L | L | H |
| H | H | H | L | H | L | L | H |
| H | H | H | L | H | L | L | H |
| H | H | H | L | L | L | L | H |
| H | H | L | H | L | L | L | H |
| H | H | H | L | H | L | L | H |
| H | H | H | L | L | L | L | L |
| H | H | H | L | H | L | L | H |
| L | L | L | H | H | L | L | H |
| L | L | H | H | L | L | L | H |
| H | H | H | L | L | L | L | H |
| H | H | L | L | H | L | L | H |
| H | H | H | L | H | L | L | H |
| L | L | L | L | L | L | L | L |
| L | L | L | L | L | L | L | L |
| L | L | L | L | L | L | L | L |

SWAB

| |
|---|
| CCLD4 (RACC UCCL(2:0)=4) |
| CCLD5 (RACC UCCL(2:0)=5) |
| CCLD6 (RACC UCCL(2:0)=6) |
| CCLD7 (RACC UCCL(2:0)=7) |

## INSTRUCTION DEPENDENT CONTROL (RACA UCCL(2:0)=1)

| N | | Z | | V | | C | |
|---|---|---|---|---|---|---|---|
| WORD+ ODD BYTE | BYTE *(EVEN + DSTM0) | WORD | BYTE | WORD | BYTE | WORD | BYTE |
| * SHFR (15)1 | ; SHFR (7)1 | SHFR(15:0)0 | SHFR(7:0)0 | SHFR15 ¥ AMX 0 | SHFR7 ¥ AMX0 | AMX0 | |
| SHFR(15)1 | SHFR(7)1 | SHFR(15:0)0 | SHER(BYTE)0 | SHFR15 ¥ AMX15 | SHFR15 ¥ AMX7 / SHFR7 ¥ AMX7 | AMX15 | AMX7 |
| * SHFR(15)1 | ; SHFR(7)1 | SHFR(15:0)0 | SHFR(7:0)0 | SHFR15 ¥ AMX0 | SHFR7 ¥ AMX0 | AMX0 | |
| SHFR(15)1 | SHFR(7)1 | SHFR(15:0)0 | SHFR(BYTE)0 | SHFR15 ¥ AMX15 | SHFR15 ¥ AMX7 / SHFR7 ¥ AMX7 | AMX15 | AMX7 |
| NOT INSTR. DEP. | | NOT INSTR. DEP. | | NOT INSRT. DEP. | | NOT INSRT. DEP. | |
| SHFR(15)1 | | SHFR(15:0)0 | | 0 | | NOT AFFECTED | |
| SHFR(15)1 | | SHFR(15:0)0 | | 0 | | NOT AFFECTED | |
| SHFR(15)1 | | SHFR(15:0)0 | | 0 | | NOT AFFECTED | |
| SHFR(15)1 | SHFR(7)1 | SHFR(15:0)0 | SHFR(BYTE)0 | 0 | | ALUCOUT 15 | ALUCOUT 7 |
| SHFR(15)1 | SHFR(7)1 | SHFR(15:0)0 | SHFR(BYTE)0 | 0 | | $\overline{\text{ALUCOUT 15}}$ | $\overline{\text{ALUCOUT 7}}$ |
| SHFR(15)1 | SHFR(7)1 | SHFR(15:0)0 | SHFR(BYTE)0 | $\overline{\text{AMX15}} * \text{ALU15}$ | $\overline{\text{AMX7}} * \text{ALU7}$ | NOT AFFECTED | |
| SHFR(15)1 | SHFR(7)1 | SHFR(15:0)0 | SHFR(BYTE)0 | $\text{AMX15} * \overline{\text{ALU15}}$ | $\text{AMX7} * \overline{\text{ALU7}}$ | NOT AFFECTED | |
| * SHFR(15)1 | ; SHFR(7)1 | SHFR(15:0)0 | SHFR(7:0)0 | A15*B15*ALU15 + $\overline{\text{A15}}$*B15*ALU15 | A7*B7*ALU7 + $\overline{\text{A7}}$*B7*ALU7 | | |
| SHFR(15)1 | SHFR(7)1 | SHFR(15:0)0 | SHFR(BYTE)0 | $\overline{\text{AMX15}} * \text{ALU15}$ | $\overline{\text{AMX7}} * \text{ALU7}$ | $\overline{\text{ALUCOUT 15}}$ | $\overline{\text{ALUCOUT 7}}$ |
| SHER (15)1 | SHFR(7)1 | SHFR(15:0)0 | SHFR(BYTE)0 | $\text{AMX15} * \overline{\text{ALU15}}$ | $\text{AMX7} * \overline{\text{ALU7}}$ | ALUCOUT 15 | ALUCOUT 7 |
| SHFR(15)1 | SHFR(7)1 | SHFR(15:0)0 | SHFR(BYTE)0 | 0 | | ALUCOUT 15 | ALUCOUT 7 |
| SHFR(15)1 | | SHFR(15:0)0 | | AMX15*$\overline{\text{BMX15}}$*$\overline{\text{ALU15}}$ + $\overline{\text{AMX15}}$*BMX15*ALU15 | | $\overline{\text{ALUCOUT 15}}$ | |
| SHFR(15)1 | SHFR(7)1 | SHFR(15:0)0 | SHFR(BYTE)0 | 0 | | NOT AFFECTED | |
| SHFR(15)0 | SHFR(7)0 | A=B(15:0) | A=B(7:0) | A15*B15*ALU15 + $\overline{\text{A15}}$*B15*ALU15 | A7*B7*ALU7 + $\overline{\text{A7}}$*B7*ALU7 | ALUCOUT 15 | ALUCOUT 7 |
| SHFR(15)1 | SHFR(7)1 | SHFR(15:0)0 | SHFR(BYTE)0 | 0 | | NOT AFFECTED | |
| SHFR(15)1 | SHFR(7)1 | SHFR(15:0)0 | SHFR(BYTE)0 | 0 | | NOT AFFECTED | |
| SHFR(15)1 | SHFR(7)1 | SHFR(15:0)0 | SHFR(BYTE)0 | 0 | | NOT AFFECTED | |
| SHFR(15)1 | | SHFR(15:0)0 | | AMX15*$\overline{\text{BMX15}}$*$\overline{\text{ALU15}}$ + $\overline{\text{AMX15}}$*BMX15*ALU15 | | ALUCOUT 15 | |
| NOT AFFECTED | | Z(OLD) * SHFR(15:0)0 | | 0 | | $\overline{\text{X}}$ | |
| NOT AFFECTED | | 1 | | 1 | | 1(ALUCN + $\overline{\text{ALUCN}}$) | |
| SHFR(15)1 | | SHFR(15:0)0 | | 0 | | AMX0 | |
| SHFR(15)1 | | SHFR(15:0)0 | | 0 | | DR00 | |
| SHFR(15)1 | | SHFR(15:0)0 | | 0 | | NOT AFFECTED | |
| NOT INSTR. DEP | | NOT INSTR. DEP. | | NOT INSTR DEP. | | NOT INSTR. DEP. | |
| SHFR(7)1 | | SHFR(7:0)0 | | 0 | | 0 | |
| SHFR(15)1 | | SHFR(15:0)0 | | 0 | | 0 | |
| SHFR(15)1 | | SHFR(15:0)0 | | V(OLD) + (SHFR15 ¥ AMX15) | | AMX15 | |
| NOT AFFECTED | | Z(OLD) * SHFR(15:0)0 | | NOT AFFECTED | | NOT AFFECTED | |
| NOT AFFECTED | | NOT AFFECTED | | NOT AFFECTED | | ALUOUT 15 | |

* ODD BYTE SWAPPED TO EVEN DURING COND. CODE CHECKING

NOTE: BYTE INSTRUCTION WITH DSTM0 IS ALWAYS EVEN BYTE

$X = Z(OLD) * \overline{DR15} + (SR=0) * DR15$

SWAB INSTR. HAS SAME ROM ADDRESS AS ASL.B

CC CNTL & INSTR DECODE ROM MAPS SLOT 8

| FIRST USED ON OPTION/MODEL | QTY. | DESCRIPTION | PART NO. | ITEM NO. |
|---|---|---|---|---|
| 11/45 | | PARTS LIST | | |

UNLESS OTHERWISE SPECIFIED DIMENSION IN INCHES. TOLERANCES

DECIMALS: .XXX = .005, .XX = .02, .X = .1 — ANGLES: ±0° 30'

REMOVE BURRS AND BREAK SHARP CORNERS SURFACE QUALITY ✓

MATERIAL

FINISH

| | | |
|---|---|---|
| DRN. Wkimt | DATE 1-20-72 | digital EQUIPMENT CORPORATION MAYNARD MASSACHUSETTS |
| CHK'D. | DATE 2/15/72 | |
| ENG. | DATE 2/14/72 | |
| PROJ. ENG. ERIK ERIKSEN | DATE 2/10/72 | |
| PROD. | DATE 2/23/72 | |

TITLE: IR DECODE & COND. CODES (IRCJ)

NEXT HIGHER ASSY. B-DD-KB11-0

SCALE NONE

SHEET 9 OF 9

| SIZE | CODE | NUMBER | REV. |
|---|---|---|---|
| D | CS | M8102-0-1 | C |

DIST.

REVISIONS: REV. | CHANGE NO | CHK

WMG 40.522 15840

FORM NO. 102-B

SIZE D CODE CS NUMBER M8102-0-1 REV. C

This drawing and specifications, herein, are the property of Digital Equipment Corporation and shall not be reproduced or copied or used in whole or in part as the basis for the manufacture or sale of items without written permission.

NOTES:
1. UNLESS OTHERWISE NOTED RESISTANCE IS IN Ω AND CAPACITANCE IS IN PICOFARADS. CAPS. WITHOUT VALUE NOTED .01 MFD

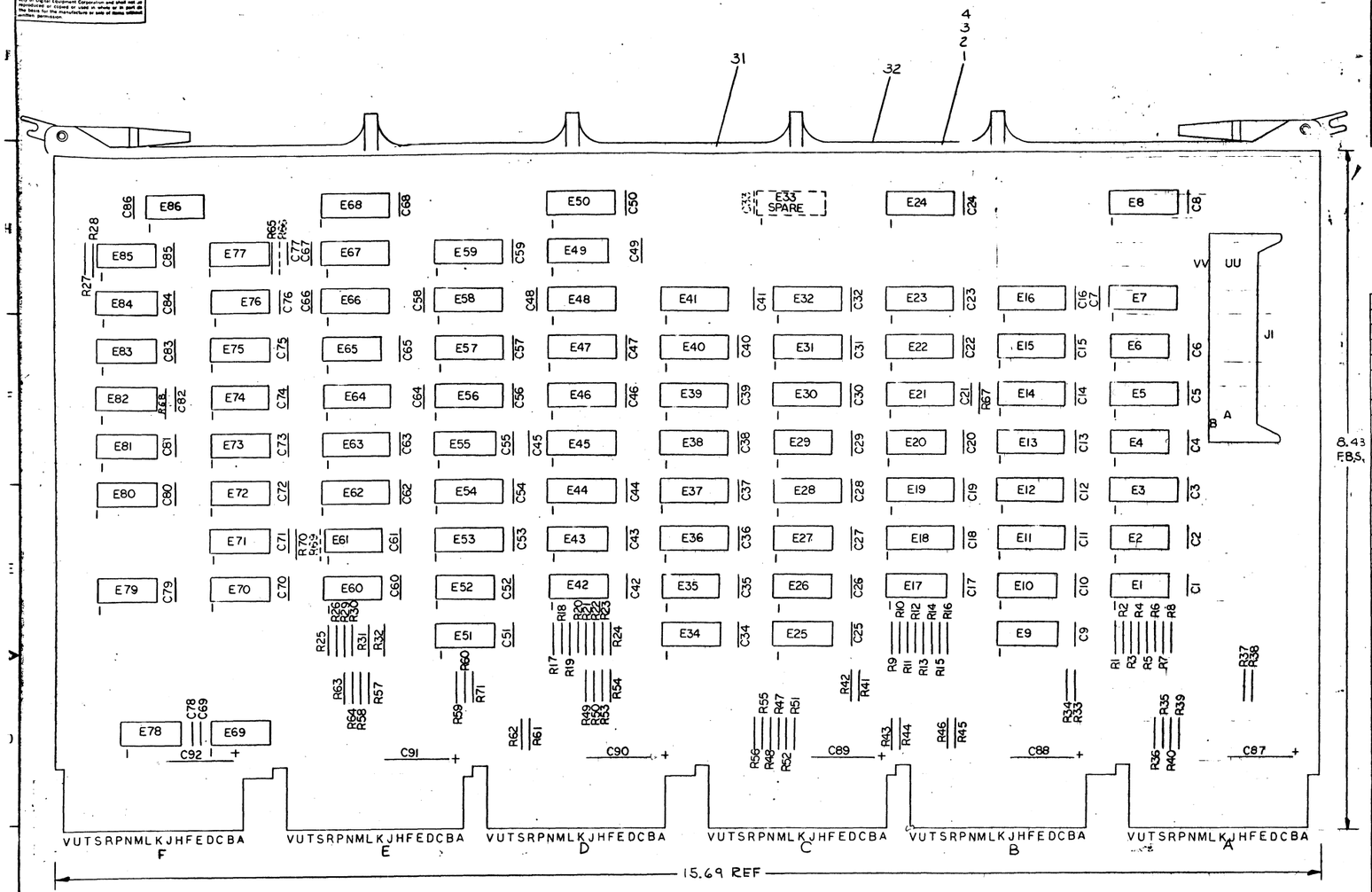


AA2, AV1, BA2, BV1, CA2, CV1, DA2, DV1, EA2, EV1, FA2, FV2

AC2, AN2, AH1, AT1, BC2, BN2, BT1, CC2, CN2, CH1, CT1, DC2, DN2, DH1, DT1, EC2, EN2, ET1, FC2, FN2, FH1, FT1

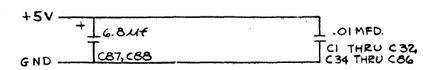


| QTY | REF DESIGNATION | DESCRIPTION | PART NO. | ITEM NO. |
|---|---|---|---|---|
| 1 | | HANDLE, MODULE | E-PS-1210711-2 | 32 |
| 2 | | EYELET | 9006732 | 31 |
| 1 | J1 | CONN 40PIN BERG | 1209941 | 30 |
| 2 | E47, E59 | IC DEC 74175 | 1910651 | 29 |
| 4 | E8, E24, E50, E68 | IC DEC 7485 | 1910224 | 28 |
| 12 | E11, E13, E15, E18, E22, E36, E38, E45, E53, E57, E63, E67 | IC DEC 745174 | 1910550 | 27 |
| 1 | E31 | IC DEC 745157 | 1910548 | 26 |
| 24 | E3, E5, E7, E12, E14, E16, E19, E21, E23, E28 E30, E32, E37, E39, E41, E44 E46, E48, E54, E56, E58, E62, E64, E66 | IC DEC 745153 | 1910547 | 25 |
| 7 | E6, E49, E69, E80, E82, E83, E85 | IC DEC 74S74 | 1910544 | 24 |
| 1 | E 79 | IC DEC 74S40 | 1910541 | 23 |
| 1 | E71 | IC DEC 74S20 | 1910539 | 22 |
| 8 | E4, E10, E29, E35, E52, E55, E65 E75 | IC DEC 74S04 | 1910534 | 21 |
| 2 | E20, E77 | IC DEC 74S11 | 1910537 | 20 |
| 3 | E70, E73, E86 | IC DEC 74S10 | 1910536 | 19 |
| 1 | E72 | IC DEC 74S00 | 1910532 | 18 |
| 1 | E40 | IC DEC 9318 | 1910454 | 17 |
| 8 | E9, E17, E25, E34, E51, E78, E81, E84 | IC DEC 74H01 | 1909849 | 16 |
| 4 | E1, E26, E42, E60 | IC DEC 8881 | 1909705 | 15 |
| 4 | E2, E27, E43, E61 | IC DEC 380 | 1909855 | 14 |
| 1 | E74 | IC DEC 74H50 | 1909060 | 13 |
| 1 | E76 | IC DEC 74H40 | 1905586 | 12 |
| 1 | R68 | RESISTOR 390Ω, ¼W, 5% | 1300309 | 11 |
| 1 | R67 | RESISTOR 180Ω, ¼W, 5% | 1301322 | 10 |
| 3 | R65, R70, R71 | RESISTOR 150Ω, ¼W, 5% | 1300250 | 9 |
| 32 | R1, R23, R25, R27, R29, R11, R13, R15, R17, R19, R21, R23, R25, R27, R29, R31, R33, R35, R37, R39, R41, R43, R45, R47, R49, R51, R53, R55, R57, R59, R61, R63 | RESISTOR 330Ω, ¼W, 5% | 1300295 | 8 |
| 32 | R2, R4, R6, R8, R10, R12, R14, R16, R18, R20, R22, R24, R26, R28, R30, R32, R34, R36, R38, R40, R42, R44, R46, R48, R50, R52, R54, R56, R58, R60, R62, R64 | RESISTOR 680Ω, ¼W, 5% | 1301424 | 7 |
| 85 | C1 THRU C32 C34 THRU C86 | CAPACITOR .01μf, 50V, 20% AXIAL | 1001610 | 6 |
| 6 | C87 THRU C92, | CAPACITOR 6.8μf, 35V, 10% TANT | 1005306 | 5 |
| 1 | | ETCHED CIRCUIT BOARD | 5009804 | 4 |
| REF | | MODULE ECO HISTORY | 8-MH-MB104-0-6 | 3 |
| REF | | ASSY/DRILLING HOLE LAYOUT | DRW-MB104-0-5 | 2 |
| REF | | X-Y COORDINATE HOLE LOCATION | X-CO-MB104-0-4 | 1 |

PARTS LIST

ETCH BOARD REV C

| IC TYPE | GND | +5V |
|---|---|---|
| DEC 745153 | 8 | 16 |
| DEC 74175 | 8 | 16 |
| DEC 7485 | 8 | 16 |
| DEC 745174 | 8 | 16 |
| DEC 745157 | 8 | 16 |
| DEC 9318 | 8 | 16 |
| DEC 380 | 1 | 8 |

GND AND 5V ARE USUALLY PIN 7 AND 14 RESPECTIVELY EXCEPTIONS ARE STATED ABOVE

IC PIN LOCATIONS

| ITEM NO. | AWG | FROM PT | TO PT |
|---|---|---|---|

JUMPER LIST

| REV | CHG | CHANGE NO. | DATE | APPROVED |
|---|---|---|---|---|
| A | | INITIATED | 7-MAY-71 | |
| B | | 7-MH-MB104-0-6 | 28-JUL-72 | |
| C | | 7-MH-MB104-0-6 | 28-JUL-72 | |

REVISIONS

DEC NO | EIA NO | DEC NO | EIA NO

SEMICONDUCTOR CONVERSION CHART

DRN [illegible] DATE 6-JUL-72
CHKD [illegible] DATE
ENG [illegible] DATE 7-JUL-72
PROJ ENG DATE
PROD DATE
NEXT HIGHER ASSY H-CO-M7139-0

DIGITAL EQUIPMENT CORPORATION MAYNARD MASSACHUSETTS

TITLE PROCESSOR DATA & UNIBUS REGS.

SIZE E | CODE | NUMBER CS M8104-0-1 | REV C

SCALE | SHEET 1 OF 2 | DIST

DEC FORM NO. DMS 106

This drawing and specifications, herein, are the property of Digital Equipment Corporation and shall not be reproduced or copied or used in whole or in part as the basis for the manufacture or sale of items without written permission.

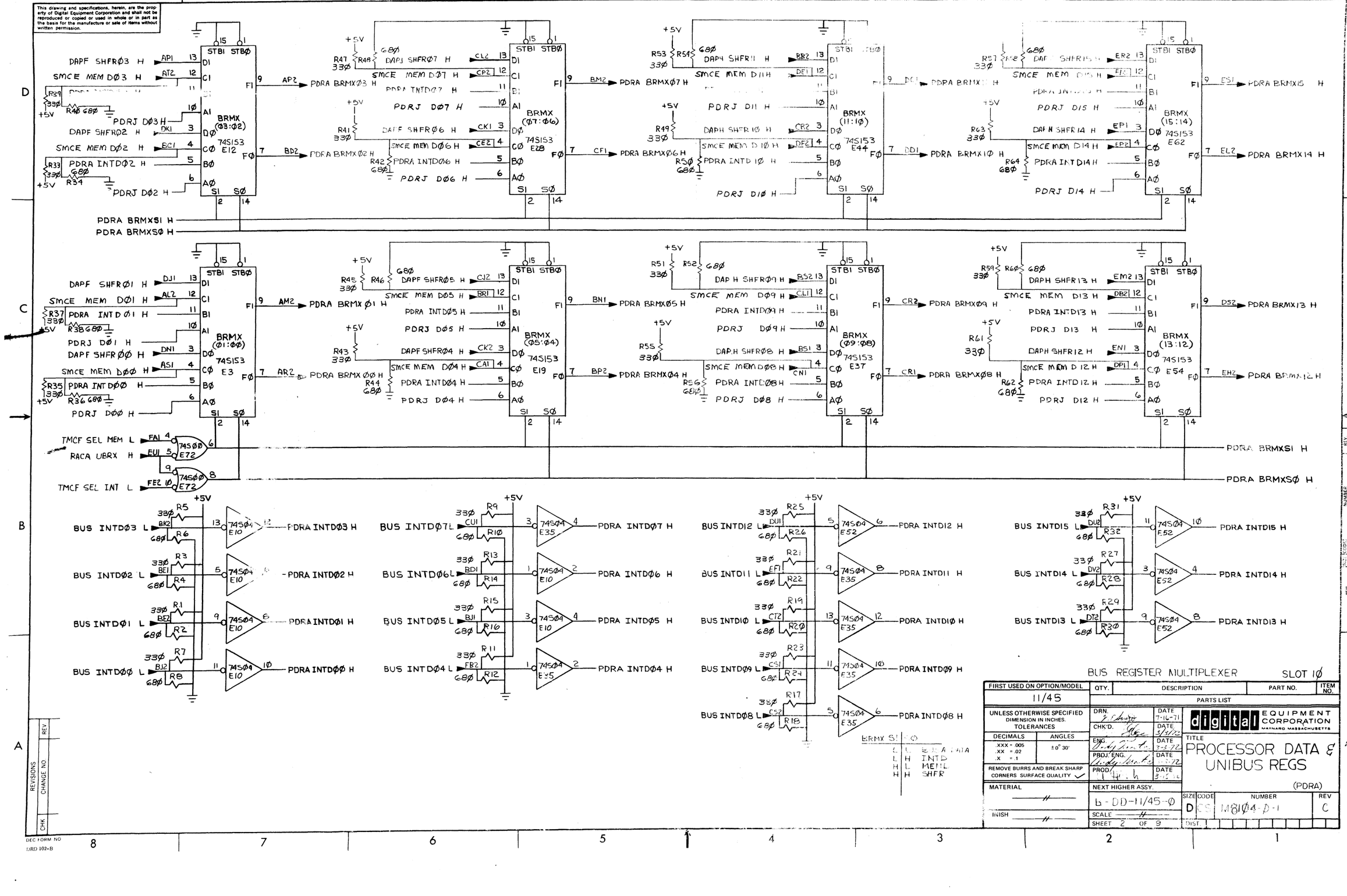


BUS REGISTER MULTIPLEXER SLOT 1Ø

| FIRST USED ON OPTION/MODEL | QTY. | DESCRIPTION | PART NO. | ITEM NO. |
|---|---|---|---|---|
| 11/45 | | PARTS LIST | | |

UNLESS OTHERWISE SPECIFIED DIMENSION IN INCHES. TOLERANCES
DECIMALS: .XXX = .005, .XX = .02, X = 1 — ANGLES: ±0° 30'
REMOVE BURRS AND BREAK SHARP CORNERS SURFACE QUALITY ✓
MATERIAL — FINISH

| | | |
|---|---|---|
| DRN. | DATE | 7-16-71 |
| CHK'D. | DATE | 8/31/72 |
| ENG. | DATE | 9-5-72 |
| PROJ. ENG. | DATE | 9-5-72 |
| PROD. | DATE | 9-5-72 |

NEXT HIGHER ASSY. b-DD-11/45-Ø
SCALE —
SHEET 2 OF 9

digital EQUIPMENT CORPORATION MAYNARD MASSACHUSETTS

TITLE: PROCESSOR DATA & UNIBUS REGS (PDRA)

SIZE D | CODE DCS | NUMBER M8104-D-1 | REV C | DIST

REVISIONS | REV | CHANGE NO | CHK

DEC FORM NO DRD 102-B

This drawing and specifications, herein, are the property of Digital Equipment Corporation and shall not be reproduced or copied or used in whole or in part as the basis for the manufacture or sale of items without written permission.

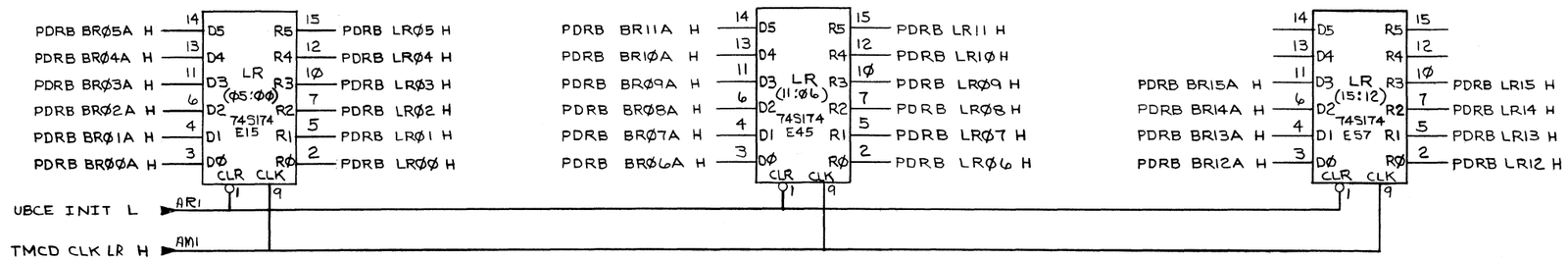


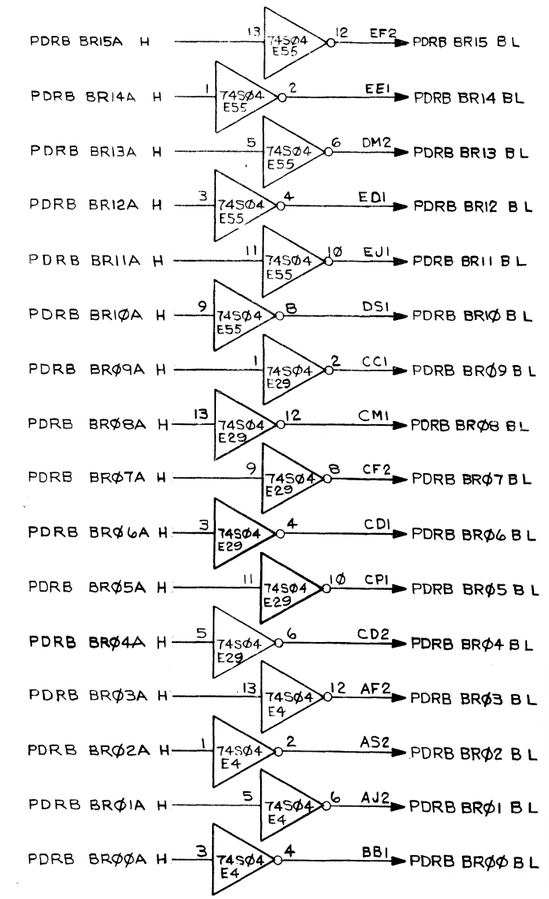


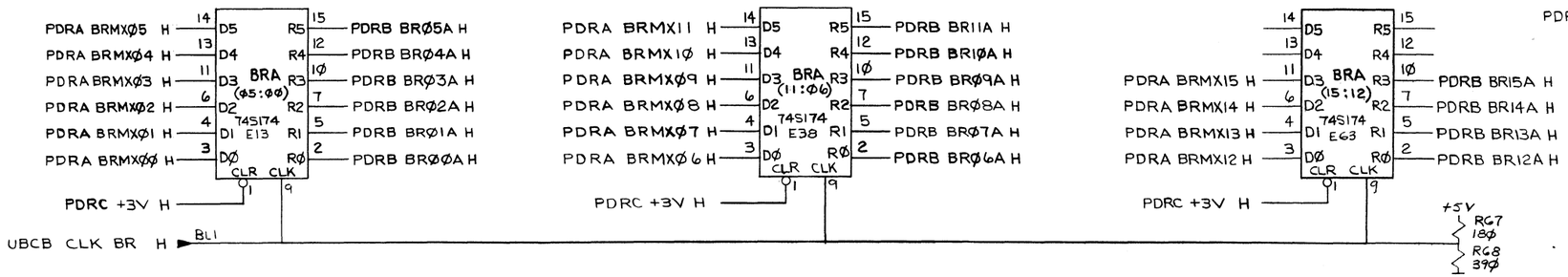


BUS REGISTER A; LIGHT REGISTER SLOT 10

| FIRST USED ON OPTION/MODEL | QTY. | DESCRIPTION | PART NO. | ITEM NO. |
|---|---|---|---|---|
| 11/45 | PARTS LIST | | | |

UNLESS OTHERWISE SPECIFIED DIMENSION IN INCHES. TOLERANCES
DECIMALS: XXX ± .005, XX ± .02, X ± .1; ANGLES: ± 0° 30'
REMOVE BURRS AND BREAK SHARP CORNERS SURFACE QUALITY ✓
MATERIAL —
FINISH —

| | | |
|---|---|---|
| DRN. | | DATE 6-21-71 |
| CHK'D. | | DATE 5/31/72 |
| ENG. | | DATE 5-31-72 |
| PROJ. ENG. | | DATE 5-31-72 |
| PROD. | | DATE 5-31-72 |
| NEXT HIGHER ASSY. | E-DL-11/45-0 | |
| SCALE | — | |
| SHEET 3 OF 9 | | |

digital EQUIPMENT CORPORATION MAYNARD MASSACHUSETTS

TITLE: PROCESSOR DATA & UNIBUS REGS (PDRB)

| SIZE | CODE | NUMBER | REV. |
|---|---|---|---|
| D | CS | M8104-0-1 | C |

DIST.

REVISIONS | REV. | CHANGE NO. | CHK

DEC FORM NO. ORD 102-B

This drawing and specifications, herein, are the property of Digital Equipment Corporation and shall not be reproduced or copied or used in whole or in part as the basis for the manufacture or sale of items without written permission.

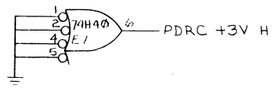


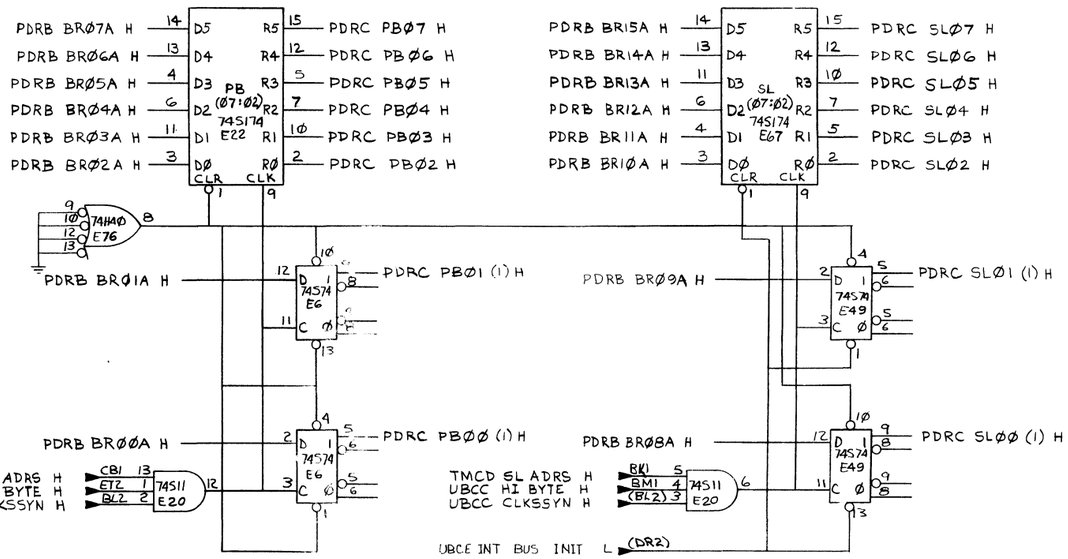


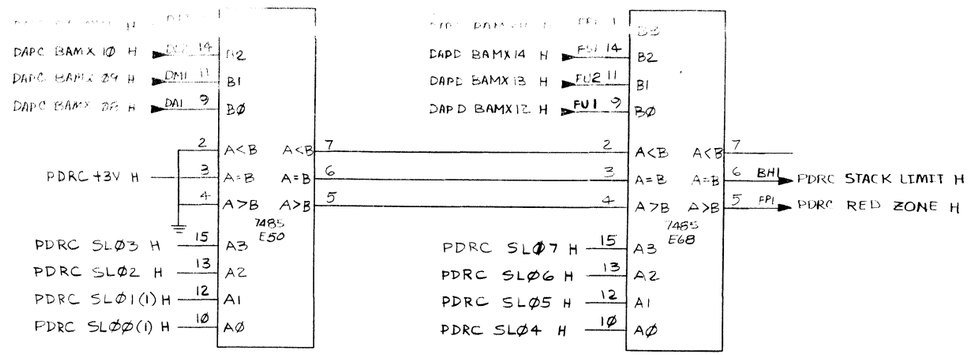


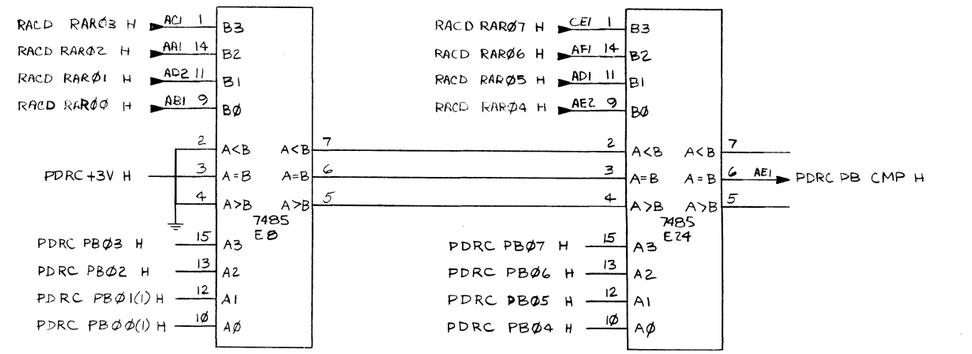


PROGRAM BREAK & STACK LIMIT REGISTERS SLOT 10

| FIRST USED ON OPTION/MODEL | QTY. | DESCRIPTION | PART NO. | ITEM NO. |
|---|---|---|---|---|
| 11/45 | | PARTS LIST | | |

UNLESS OTHERWISE SPECIFIED DIMENSION IN INCHES. TOLERANCES

| DECIMALS | ANGLES |
|---|---|
| .XXX ± .005 | ± 0° 30' |
| .XX ± .02 | |
| .X ± .1 | |

REMOVE BURRS AND BREAK SHARP CORNERS. SURFACE QUALITY ✓

MATERIAL —

FINISH —

| | | |
|---|---|---|
| DRN. | DATE 7/27/71 | digital EQUIPMENT CORPORATION MAYNARD MASSACHUSETTS |
| CHK'D. | DATE 3/9/72 | |
| ENG. | DATE 5/5/72 | TITLE PROCESSOR DATA & UNIBUS REGS |
| PROJ ENG. | DATE 5/5/72 | |
| PROD. | DATE 3/15/72 | |

NEXT HIGHER ASSY. B-DD-11/45-0

SCALE —

SHEET 4 OF 9

| SIZE | CODE | NUMBER | REV. |
|---|---|---|---|
| D | CS | M8104-1-1 | C |

DIST

| REVISIONS | REV | CHANGE NO | CHK |
|---|---|---|---|
| | | | |

DEC FORM NO. DRD 102-B

SIZE D CODE CS NUMBER M8104-0-1 REV C

This drawing and specifications, herein, are the property of Digital Equipment Corporation and shall not be reproduced or copied or used in whole or in part as the basis for the manufacture or sale of items without written permission.

TMCE KERNEL DATI L (FD) 74S04 E75 → PDRD KERNEL DATI B H

PDRB BR13A H → 74H50 E74

PDRD ISB00 B L, RACB UIB501 H, TIGD T4B H → (FC1) (FJ1) 74S11 E77 → PDRB BR15A H

PDRB BR15A H → 74S10 E66 → PDRD LOAD PS H

PDRB BR13A H → 74S10 E66 → PDRB BR15A H

TIGD T5B H → 15Ø FF2 R70 RG9 +5V → (FC1) 74S20 E71

PDRD IB500 B L, RACB UIB501 H, PDRB BR13A H → 74S20 E71

PDRD PS CLK H → 74S04 E52 → UBCE STATUS CLR L (FH2)

PDRD LOAD PS H → 74S10 E73

PDRB BR12A H, TMCE KERNEL DATI L (FD1), PDRD KERNEL DATI B H, PDRD PS14 (1) H → 74S50 E74

PDRB BR11A H, PDRD LOAD PS H → 74S10 E86

TMCD PS ADRS H, UBCC CLKSSYN H (DL1), UBCC HI BYTE H (BM1) → 74S10 E73 → 74S00 E72 → PDRD PS CLK H

PDRB BR15A H, PDRB BR14A H, PDRB BR13A H, PDRB BR12A H → 74175 D3 R3, D2 R2, D1 R1, D0 R0, CLR CLK, E59 PIR (15:12)

EH1 PDRD PIR15 (1) H; EK1 PDRD PIR14 (1) H; DR1 PDRD PIR13 (1) H; ED2 PDRD PIR12 (1) H

TMCD PIR ADRS H, UBCC CLKSSYN H (BM1), UBCC HI BYTE H (BL2) → EV2 74S11 E20 → 9318 E1 GS, E40 PIR A2 A1 A0 ENCODER, ED

PDRC +3V H → ED

PDRB BR11A H, PDRB BR10A H, PDRB BR09A H → 74175 D3 R3, D2 R2, D1 R1, D0 R0, CLR CLK, E47 PIR (11:09)

AN1 PDRD PIR11 (1) H; DF1 PDRD PIR10 (1) H; CU2 PDRD PIR09 (1) H

UBCE INT BUS INIT L (DR2)

PDRD PS07 (Ø) H, PDRD PS06 (Ø) H, PDRD PS05 (Ø) H → 74S11 E77 → FI2 PDRD PRIORITY=Ø H

NOTE:
RG9*RG6 ARE SPARES.
NO VALUE IS ASSIGNED.

SSRA PS RESTORE (1) H (FV2) → 74S04 E65

TMCE KERNEL DATI L (FD1), PDRD PS14 (Ø) L → 74S10 E73

RACB UIB501 H (FC1), PDRD IB500 B L → 74S20 E71

150 RG5, +5V RG6

TIGD T4B H (FJ1), TMCE SET PRIORITY H (EV2), TMCD PS ADRS H (DL1), UBCC CLKSSYN H (BL2), UBCC LO BYTE H (ETE) → 74S10 E70 → 74S10 E70

RACB UIB501 H, FC1 → 74S00 E72

RACB UIB500 H, FR2 → 74S04 E75

TIGD T4B H (FJ1) → 74S11 E77 → PDRD IB500 B L

PDRD READ PS H → 74S00 E79

PDRB BR02A H, PDRB BR07A H, PDRB BR01A H, PDRB BR00A H, PDRB BR05 A H → 74S157 E31 B3 B2 B1 B0 A3 A2 A1 A0 SEL ENA, Q3 Q2 Q1 Q0

PDRC +3V H, PDRB BR04 A H → 74S10 E70

UBCE INIT L (AR1) → PDRD READ PS H

IRCH N B (1) H (BP1) → 74H01 E17 → BUS INTD03 L

IRCH Z (1) H (BR2) → 74H01 E17 → BUS INTD02 L

IRCH V (1) H (BU2) → 74H01 E17 → BUS INTD01 L

IRCH C B (1) H (BI2) → 74H01 E17 → BUS INTD00 L

PDRD READ PS H

PDRD PS15 (1) H → 74H01 E81 → BUS INTD15 L

PDRD PS14 (1) H → 74H01 E84 → BUS INTD14 L

PDRD PS13 (Ø) H → 74H01 E81 → BUS INTD13 L

PDRD PS12 (1) H → 74H01 E78 → BUS INTD12 L

PDRD PS12 (Ø) H

PDRD PS11 (1) H → 74H01 E81 → BUS INTD11 L

PDRD PS11 (Ø) H

PDRD PS07 (1) H → 74H01 E81 → BUS INTD07 L

PDRD PS07 (Ø) H

PDRD PS06 (1) H → 74H01 E84 → BUS INTD06 L

PDRD PS06 (Ø) H

PDRD PS05 (1) H → 74H01 E84 → BUS INTD05 L

PDRD PS05 (Ø) H

PDRD PS04 (1) H → 74H01 E84 → BUS INTD04 L

PDRD PS04 (Ø) H

PDRD PS00 (1) H → 74H01 E84 → BUS INTD00 L

PDRD PS00 (Ø) H

PDRD PS01 (1) H → 74H01 E84 → BUS INTD01 L

PDRD PS01 (Ø) H

PDRD PS02 (1) H → 74H01 E84 → BUS INTD02 L

PDRD PS02 (Ø) H

PDRD PS03 (1) H → 74H01 E84 → BUS INTD03 L

PDRD PS03 (Ø) H

PDRD PS10 (1) H → 74H01 E84 → BUS INTD10 L

PDRD PS10 (Ø) H

PIR + PS REGISTERS — SLOT 10

| FIRST USED ON OPTION/MODEL | QTY | DESCRIPTION | PART NO. | ITEM NO. |
|---|---|---|---|---|
| 11/45 | | PARTS LIST | | |

UNLESS OTHERWISE SPECIFIED DIMENSION IN INCHES. TOLERANCES: DECIMALS .XXX ± .005, .XX ± .02, .X ± .1; ANGLES ± 0° 30'. REMOVE BURRS AND BREAK SHARP CORNERS. SURFACE QUALITY ✓

DRN — DATE 2-25-76; CHK'D — DATE; ENG — DATE; PROJ. ENG — DATE; PROJ — DATE

MATERIAL — NEXT HIGHER ASSY — M-DD-11/45-0

FINISH — SCALE — SHEET 5 OF 13

DIGITAL EQUIPMENT CORPORATION MAYNARD MASSACHUSETTS

TITLE: PROCESSOR DATA & UNIBUS REGS (PDR)

SIZE D | CODE CS | NUMBER M8104-0-1 | REV C | DIST

| REVISIONS | CHANGE NO | CHK | REV |
|---|---|---|---|

BRUNING 40-522 15840

DEC FORM NO DRD 102-B

M8104-0-1

This drawing and specifications, herein, are the property of Digital Equipment Corporation and shall not be reproduced or copied or used in whole or in part as the basis for the manufacture or sale of items without written permission.

TMCD HI BYTE EN H ← ERI 11 — 74S04 E65 — 10

TMCD LO BYTE EN H ← FEI 5 — 74S04 E75 — 6

TMCD DMXSI H ← E17 9 — 74S04 E65 — 8

TMCD DMXSØ H ← E52 5 — 74S04 E65 — 6

PDRE DMXSI L

PDRE DMXSØ L

## DMX (Ø5:Ø8) — 74S153 E39

| | |
|---|---|
| PDRB BRØ9A H | 13 DI |
| PDRC SLØ1 (1) H | 12 CI |
| PDRD PIRØ9 (1) H | 11 BI |
| | 10 AI |
| PDRB BRØ8A H | 3 DØ |
| PDRC SLØØ (1) H | 4 CØ |
| | 5 BØ |
| | 6 AØ |
| | 1 STBI |
| | 15 STBØ |
| | 9 FI |
| | 7 FØ |
| | 2 SI |
| | 14 SØ |

9 → 8881 E42 (8) → 10 (DE2) → BUSA DØ9 L

7 → 8881 E42 (6) → 4 (EB1) → BUSA DØ8 L

## DMX (11:1Ø) — 74S153 E46

| | |
|---|---|
| PDRB BR11A H | 13 DI |
| PDRC SLØ3 H | 12 CI |
| PDRD PIR11 (1) H | 11 BI |
| PDRD PS11 (1) H | 10 AI |
| PDRB BR1ØA H | 3 DØ |
| PDRC SLØ2 H | 4 CØ |
| PDRD PIR1Ø (1) H | 5 BØ |
| | 6 AØ |
| | 1 STBI |
| | 15 STBØ |
| | 9 FI |
| | 7 FØ |
| | 2 SI |
| | 14 SØ |

9 → 8881 E42 (3) → 1 (DH2) → BUSA DI1 L

7 → 8881 E42 (11) → 13 (DK2) → BUSA DIØ L

## DMX (13:12) — 74S153 E56

| | |
|---|---|
| PDRB BR13A H | 13 DI |
| PDRC SLØ5 H | 12 CI |
| PDRD PIR13 (1) H | 11 BI |
| PDRD PS13 (1) H | 10 AI |
| PDRB BR12A H | 3 DØ |
| PDRC SLØ4 H | 4 CØ |
| PDRD PIR12 (1) H | 5 BØ |
| PDRD PS12 (1) H | 6 AØ |
| | 1 STBI |
| | 15 STBØ |
| | 9 FI |
| | 7 FØ |
| | 2 SI |
| | 14 SØ |

9 → 8881 E60 (6) → 4 (BF1) → BUSA DI3 L

7 → 8881 E60 (9) → 10 (BH2) → BUSA DI2 L

## DMX (15:14) — 74S153 E64

| | |
|---|---|
| PDRB BR15A H | 13 DI |
| PDRC SLØ7 H | 12 CI |
| PDRD PIR15 (1) H | 11 BI |
| PDRD PS15 (1) H | 10 AI |
| PDRB BR14A H | 3 DØ |
| PDRC SLØ6 H | 4 CØ |
| PDRD PIR14 (1) H | 5 BØ |
| PDRD PS14 (1) H | 6 AØ |
| | 1 STBI |
| | 15 STBØ |
| | 9 FI |
| | 7 FØ |
| | 2 SI |
| | 14 SØ |

9 → 8881 E60 (11) → 13 (AJ1) → BUSA DI5 L

7 → 8881 E60 (3) → 1 (CJ1) → BUSA DI4 L

## DMX (Ø1:ØØ) — 74S153 E5

| | |
|---|---|
| PDRB BRØIA H | 13 DI |
| PDRC PBØ1 (1) H | 12 CI |
| PDRD PIAØØ H | 11 BI |
| IRCH V (1) H | 10 AI |
| PDRB BRØØA H | 3 DØ |
| PDRC PBØØ (1) H | 4 CØ |
| | 5 BØ |
| IRCH C B (1) H | 6 AØ |
| | 1 STBI |
| | 15 STBØ |
| | 9 FI |
| | 7 FØ |
| | 2 SI |
| | 14 SØ |

9 → 8881 E1 (11) → 13 (AV2) → BUSA DØ1 L

7 → 8881 E1 (3) → 1 (BA1) → BUSA DØØ L

## DMX (Ø3:Ø2) — 74S153 E14

| | |
|---|---|
| PDRB BRØ3A H | 13 DI |
| PDRC PBØ3 H | 12 CI |
| PDRD PIAØ2 H | 11 BI |
| IRCH N B (1) H | 10 AI |
| PDRB BRØ2A H | 3 DØ |
| PDRC PBØ2 H | 4 CØ |
| PDRD PIAØ1 H | 5 BØ |
| IRCH Z (1) H | 6 AØ |
| | 1 STBI |
| | 15 STBØ |
| | 9 FI |
| | 7 FØ |
| | 2 SI |
| | 14 SØ |

9 → 8881 E1 (9) → 10 (AU2) → BUSA DØ3 L

7 → 8881 E1 (6) → 4 (AU1) → BUSA DØ2 L

## DMX (Ø5:Ø4) — 74S153 E21

| | |
|---|---|
| PDRB BRØ5A H | 13 DI |
| PDRC PBØ5 H | 12 CI |
| PDRD PIAØØ H | 11 BI |
| PDRD PSØ5 (1) H | 10 AI |
| PDRB BRØ4A H | 3 DØ |
| PDRC PBØ4 H | 4 CØ |
| | 5 BØ |
| PDRD PSØ4 (1) H | 6 AØ |
| | 1 STBI |
| | 15 STBØ |
| | 9 FI |
| | 7 FØ |
| | 2 SI |
| | 14 SØ |

9 → 8881 E26 (6) → 4 (CH2) → BUSA DØ5 L

7 → 8881 E26 (9) → 10 (BF2) → BUSA DØ4 L

## DMX (Ø7:Ø6) — 74S153 E30

| | |
|---|---|
| PDRB BRØ7A H | 13 DI |
| PDRC PBØ7 H | 12 CI |
| PDRD PIAØ2 H | 11 BI |
| PDRD PSØ7 (1) H | 10 AI |
| PDRB BRØ6A H | 3 DØ |
| PDRC PBØ6 H | 4 CØ |
| PDRD PIAØ1 H | 5 BØ |
| PDRD PSØ6 (1) H | 6 AØ |
| | 1 STBI |
| | 15 STBØ |
| | 9 FI |
| | 7 FØ |
| | 2 SI |
| | 14 SØ |

9 → 8881 E26 (11) → 13 (CM2) → BUSA DØ7 L

7 → 8881 E26 (3) → 1 (AK2) → BUSA DØ6 L

| DMX SI | SØ | OUTPUT |
|---|---|---|
| | L | L STATUS |
| | L | H PIR ; PIA |
| | H | L SL ; PB |
| | H | H BR |

UNIBUSA DATA MULTIPLEXER SLOTIØ

| FIRST USED ON OPTION/MODEL | QTY. | DESCRIPTION | PART NO. | ITEM NO. |
|---|---|---|---|---|
| 11/45 | | PARTS LIST | | |

UNLESS OTHERWISE SPECIFIED DIMENSION IN INCHES. TOLERANCES
DECIMALS .XXX ± .005, .XX ± .02, X ± ... ANGLES ±0° 30'
REMOVE BURRS AND BREAK SHARP CORNERS SURFACE QUALITY ✓
MATERIAL —
FINISH —

DRN. S.W.Roberts DATE 7/13/71
CHK'D. DATE
ENG. DATE 1-7-72
PROJ. ENG. DATE
PROD DATE 3-15-72
NEXT HIGHER ASSY. B-DD-11/41 2

digital EQUIPMENT CORPORATION MAYNARD MASSACHUSETTS

TITLE: PROCESSOR DATA & UNIBUS REGS. (PDRF)

SIZE D | CODE | NUMBER M8104-0-1 | REV C
SCALE —
SHEET 6 OF 9 | DIST

REVISIONS | REV | CHANGE NO | CHK

DEC FORM NO DRD 102-B

This drawing and specifications, herein, are the property of Digital Equipment Corporation and shall not be reproduced or copied or used in whole or in part as the basis for the manufacture or sale of items without written permission.



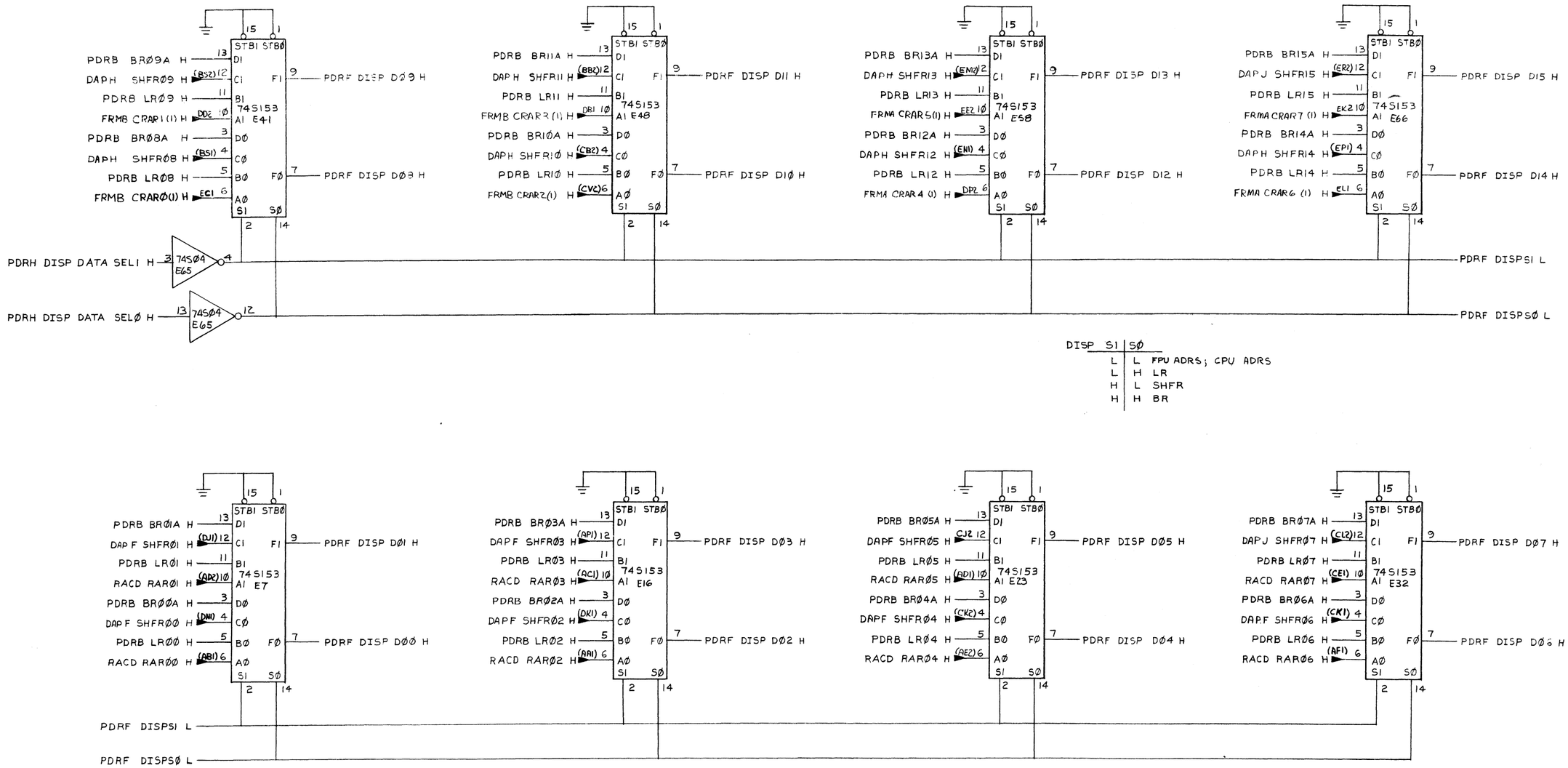


| DISP | S1 | S0 |
|---|---|---|
| | L | L FPU ADRS; CPU ADRS |
| | L | H LR |
| | H | L SHFR |
| | H | H BR |

DATA DISPLAY MULTIPLEXER SLOT 10

| FIRST USED ON OPTION/MODEL | QTY. | DESCRIPTION | PART NO. | ITEM NO. |
|---|---|---|---|---|
| 11/45 | | PARTS LIST | | |

UNLESS OTHERWISE SPECIFIED DIMENSION IN INCHES. TOLERANCES
DECIMALS: .XXX = .005, .XX = .02, .X = .1 | ANGLES: ±0° 30'
REMOVE BURRS AND BREAK SHARP CORNERS SURFACE QUALITY ✓
MATERIAL —
FINISH —

| | | |
|---|---|---|
| DRN. | DATE | 7-2-71 |
| CHK'D. | DATE | 7/5/72 |
| ENG. | DATE | 7-5-72 |
| PROJ. ENG. | DATE | 7-72 |
| PROD. | DATE | 3-15-72 |

NEXT HIGHER ASSY. B-DD-11/45-0
SCALE —
SHEET 7 OF 9

digital EQUIPMENT CORPORATION MAYNARD MASSACHUSETTS

TITLE: PROCESSOR DATA & UNIBUS REGS (PDRF)

| SIZE | CODE | NUMBER | REV. |
|---|---|---|---|
| D | CS | M8104-0-1 | C |

DIST.

| REVISIONS | REV | CHANGE NO | CHK |
|---|---|---|---|

DEC FORM NO

This drawing and specifications, herein, are the property of Digital Equipment Corporation and shall not be reproduced or copied or used in whole or in part as the basis for the manufacture or sale of items without written permission.

TMCF READ SW L ◄ FKI 5
TMCD SWADRS B L ◄ FMI 3 E79 2

PDRH SWRØ7 H → 74HØ1 E25 9,8 → CUI → BUS INTDØ7 L
PDRH SWRØ6 H → 74HØ1 E25 5,4,6 → BDI → BUS INTDØ6 L
PDRH SWRØ5H → 74HØ1 E25 1,2,3 → BJI → BUS INTDØ5 L
PDRH SWRØ4 H → 74HØ1 E25 12,13,11 → FBZ → BUS INTDØ4 L
PDRH SWRØ3 H → 74HØ1 E9 2,1,3 → BKZ → BUS INTDØ3 L
PDRH SWRØ2 H → 74HØ1 E9 4,5,6 → BEI → BUS INTDØ2 L
PDRH SWRØ1 H → 74HØ1 E9 9,10,8 → BEZ → BUS INTDØ1 L
PDRH SWRØØ H → 74HØ1 E9 12,13,11 → BJZ → BUS INTDØØ L

PDRH SWR15 H → 74HØ1 E51 12,13,11 → DUZ → BUS INTDI5 L
PDRH SWR14 H → 74HØ1 E51 1,2,3 → DVZ → BUS INTD14 L
PDRH SWR13 H → 74HØ1 E51 9,10,8 → DTZ → BUS INTD13 L
PDRH SWR12 H → 74HØ1 E51 4,5,6 → DUI → BUS INTD12 L
PDRH SWR11 H → 74HØ1 E34 9,10,8 → EFI → BUS INTD11 L
PDRH SWRIØ H → 74HØ1 E34 1,2,3 → CTZ → BUS INTDIØ L
PDRH SWRØ9 H → 74HØ1 E34 12,13,11 → CSI → BUS INTDØ9 L
PDRH SWRØ8 H → 74HØ1 E34 4,5,6 → CSZ → BUS INTDØ8 L

+5VC

PDRF DISP DØØ H
PDRF DISP DØ1 H
PDRF DISP DØ2 H
PDRF DISP DØ3 H
PDRF DISP DØ4 H
PDRF DISP DØ5 H
PDRF DISP DØ6 H
PDRF DISP DØ7 H
PDRF DISP DØ8 H
PDRF DISP DØ9 H
PDRF DISP DIØ H
PDRF DISP DI1 H
PDRF DISP DI2 H
PDRF DISP DI3 H
PDRF DISP DI4 H
PDRF DISP DI5 H

PDRH SWRØØ H
PDRH SWRØ1 H
PDRH SWRØ2 H
PDRH SWRØ3 H
PDRH SWRØ4 H
PDRH SWRØ5 H
PDRH SWRØ6 H
PDRH SWRØ7 H
PDRH SWRØ8 H
PDRH SWRØ9 H
PDRH SWRIØ H
PDRH SWRI1 H
PDRH SWRI2 H
PDRH SWRI3 H
PDRH SWRI4 H
PDRH SWRI5 H
ALI ► PDRH SWRI6 H
AKI ► PDRH SWRI7 H

PDRH DISP DATA SELØ H
PDRH DISP DATA SEL1 H

SSRB SRØ MODE Ø H ► BUI

12-9941

PDR/KNL INTERFACE
SIGNALS TO CONSOLE SIGNALS FROM CONSOLE

SWITCH REGISTER AND CONSOLE CABLE SLOTIØ

| FIRST USED ON OPTION/MODEL | QTY. | DESCRIPTION | PART NO. | ITEM NO. |
|---|---|---|---|---|
| 11/45 | | PARTS LIST | | |

UNLESS OTHERWISE SPECIFIED DIMENSION IN INCHES. TOLERANCES
DECIMALS: XXX = .005, .XX = .02, .X = .1 — ANGLES: ±0° 30'
REMOVE BURRS AND BREAK SHARP CORNERS SURFACE QUALITY ✓
MATERIAL —
FINISH —

| | | DATE |
|---|---|---|
| DRN | | 11/71 |
| CHK | | 3/72 |
| ENG | | 3/72 |
| PROJ. ENG. | | 3/72 |
| PROD. | | 3/72 |

NEXT HIGHER ASSY. B-DD-11/45-Ø

digital EQUIPMENT CORPORATION MAYNARD MASSACHUSETTS

TITLE: PROCESSOR DATA UNIBUS REGS (PDRH)

| SIZE | CODE | NUMBER | REV. |
|---|---|---|---|
| D | CS | M8104-Ø-1 | C |

SCALE —
SHEET 8 OF 9
DIST.

REVISIONS | REV | CHANGE NO | CHK

DEC FORM NO DRD 102-B

THIS DRAWING AND SPECIFICATIONS, HEREIN, ARE THE PROPERTY OF DIGITAL EQUIPMENT CORPORATION AND SHALL NOT BE REPRODUCED OR COPIED OR USED IN WHOLE OR IN PART AS THE BASIS FOR THE MANUFACTURE OR SALE OF ITEMS WITHOUT WRITTEN PERMISSION.
COPYRIGHT © DIGITAL EQUIPMENT CORPORATION

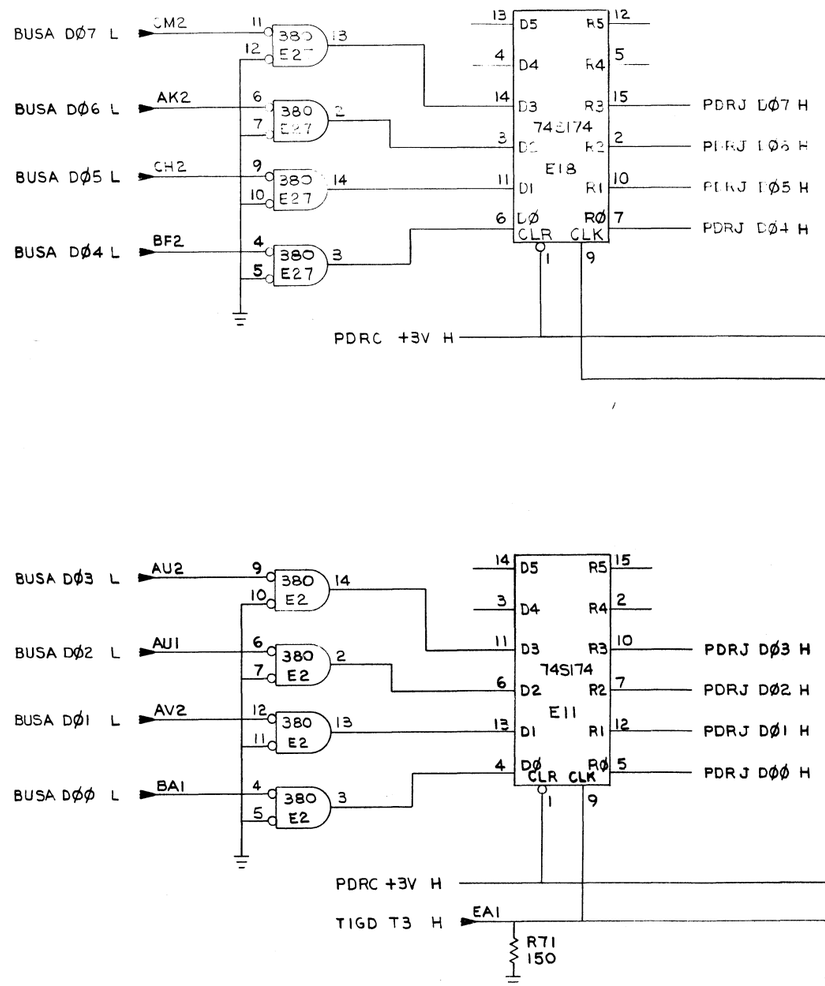


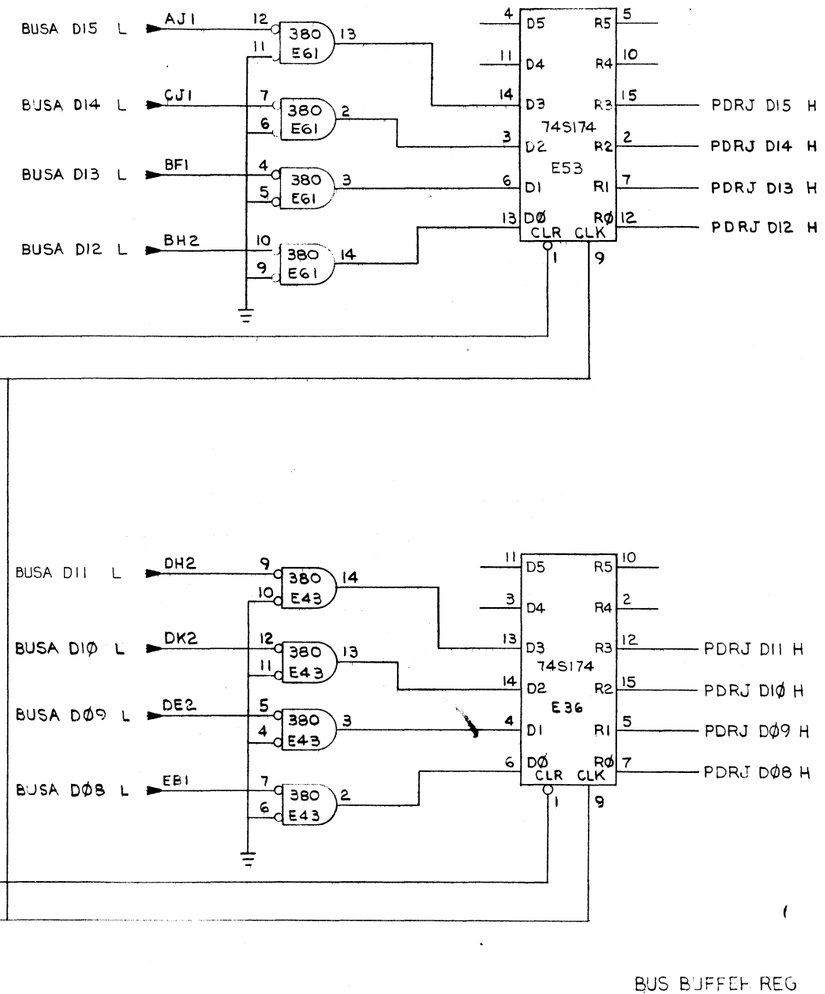


BUS BUFFER REG SLOT IØ

| FIRST USED ON OPTION/MODEL | QTY. | DESCRIPTION | PART NO. | ITEM NO. |
|---|---|---|---|---|
| 11/45 | | PARTS LIST | | |

UNLESS OTHERWISE SPECIFIED DIMENSION IN INCHES
TOLERANCES
DECIMALS: .xxx = .005, .xx = .02, .x = .1 | ANGLES: 0 30'
REMOVE BURRS AND BREAK SHARP CORNERS SURFACE QUALITY ∨

| | | |
|---|---|---|
| DRN. | | DATE 12/73 |
| CHK'D | | DATE 1/5/73 |
| ENG. | | DATE 1/15/73 |
| PROJ. ENG. | | DATE 1/15/73 |
| PROD. | | DATE |

digital EQUIPMENT CORPORATION MAYNARD MASSACHUSETTS

TITLE: PROCESSOR DATA UNIBUS REGS (PDRJ)

MATERIAL: /
FINISH: /
NEXT HIGHER ASSY.: B-DD-11/45-0
SCALE: /
SHEET 9 OF 9

| SIZE | CODE | NUMBER | REV. |
|---|---|---|---|
| D | CS | M8104-0-1 | C |

DIST.

REVISIONS: LTR C, CHANGE PER ECO

DEC FORM 11-5 6/73 11121

M8104-0-1 C

This drawing and specifications, herein, are the property of Digital Equipment Corporation and shall not be reproduced or copied or used in whole or in part as the basis for the manufacture or sale of items without written permission.

1. UNLESS OTHERWISE NOTED, RESISTANCE IS IN Ω AND CAPACITANCE IS IN MICROFARADS. CAPS. WITHOUT VALUE NOTED ARE .01 MFD
2. E61 & E62 ARE SPARE IC LOCATIONS
3. R131, R133, R135, R137 & R139 ARE NOT USED

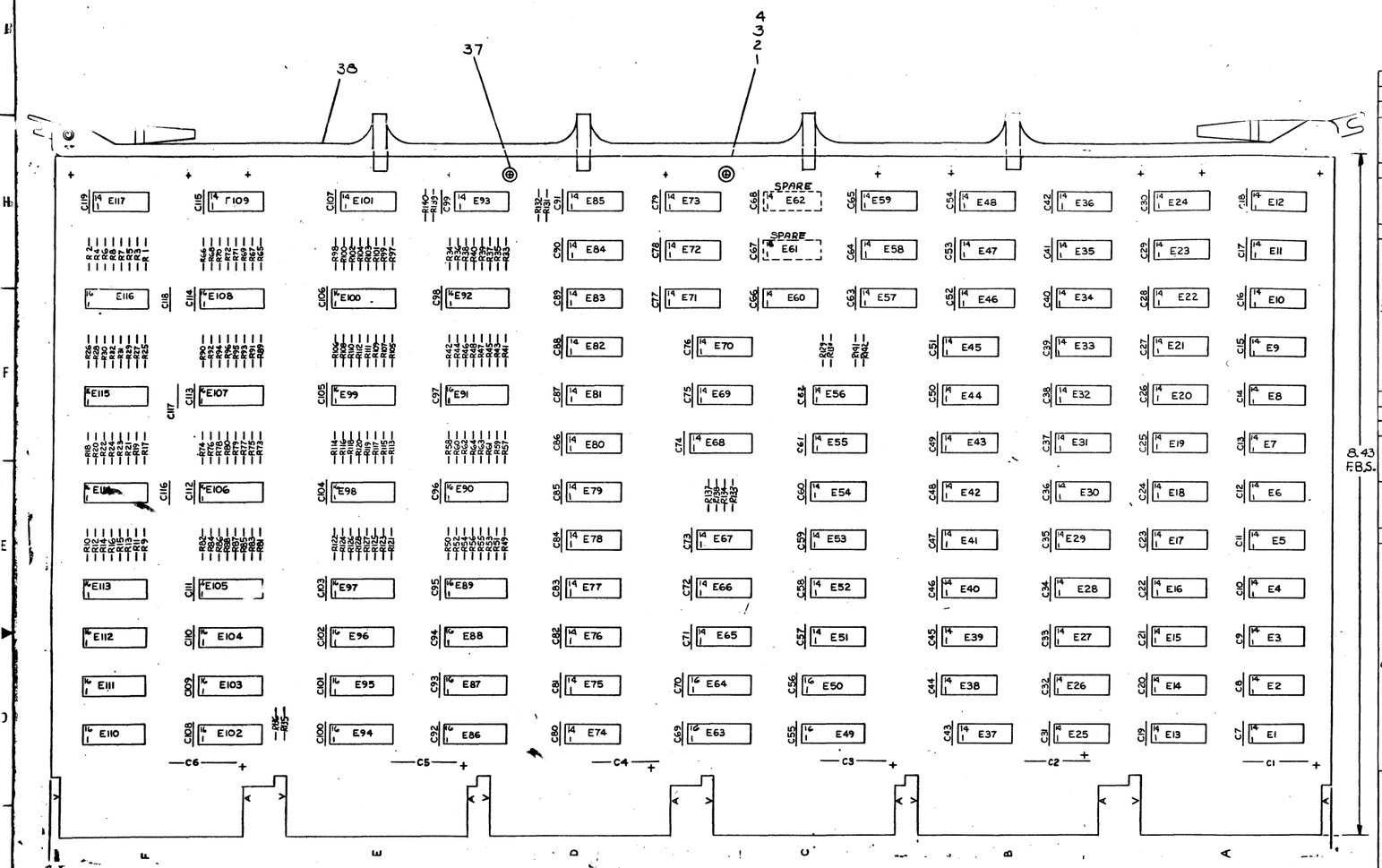


| | | | | |
|---|---|---|---|---|
| 1 | E91 | IC DEC 74187 (OR 3301) | 23-C03A2 | 23 |
| 1 | E89 | IC DEC 74187 (OR 3301) | 23-C02A2 | 22 |
| 1 | E90 | IC DEC 74187 (OR 3301) | 23-C01A2 | 21 |
| 12 | E1, E2, E13, E19, E25, E26, E36, E37, E38, E73, E109, E117 | IC DEC 74S74 | 1910544 | 20 |
| 1 | E68 | IC DEC 74S74-45 | 1910950 | 19 |
| 12 | E86, E87, E88, E94, E95, E96, E102, E103, E104, E110, E111, E112 | IC DEC 74S174 | 1910550 | 18 |
| 4 | E49, E50, E63, E64 | IC DEC 74S153 | 1910547 | 17 |
| 38 | E5, E7, E8, E9, E11, E12, E17, E18, E19, E20, E21, E22, E23, E24, E33, E35, E39, E42, E43, E44, E45, E46, E47, E51, E54, E65, E70, E71, E74, E75, E76, E77, E80, E81, E82, E83, E101, E32 | IC DEC 74S64 | 1910542 | 16 |
| 1 | E15 | IC DEC 74S40 | 1910541 | 15 |
| 3 | E16, E30, E41 | IC DEC 74S20 | 1910539 | 14 |
| 4 | E55, E66, E69, E85 | IC DEC 74S11 | 1910537 | 13 |
| 10 | E3, E10, E28, E29, E40, E48, E53, E59, E60, E67 | IC DEC 74S10 | 1910536 | 12 |
| 11 | E6, E27, E34, E52, E56, E57, E72, E78, E79, E84, E93 | IC DEC 74S04 | 1910534 | 11 |
| 3 | E4, E31, E58 | IC DEC 74S00 | 1910532 | 10 |
| 66 | R2, R4, R6, R8, R10, R12, R14, R16, R18, R20, R22, R24, R26, R28, R30, R32, R34, R36, R38, R40, R42, R44, R46, R48, R50, R52, R54, R56, R58, R60, R62, R64, R66, R68, R70, R72, R74, R76, R78, R80, R82, R84, R86, R88, R90, R92, R94, R96, R98, R100, R102, R104, R106, R108, R110, R112, R114, R116, R118, R120, R122, R124, R126, R128, R130, R142 | RESISTOR 680Ω, ¼W, 5% | 1301424 | 9 |
| 66 | R1, R3, R5, R7, R9, R11, R13, R15, R17, R19, R21, R23, R25, R27, R29, R31, R33, R35, R37, R39, R41, R43, R45, R47, R49, R51, R53, R55, R57, R59, R61, R63, R65, R67, R69, R71, R73, R75, R77, R79, R81, R83, R85, R87, R89, R91, R93, R95, R97, R99, R101, R103, R105, R107, R109, R111, R113, R115, R117, R119, R121, R123, R125, R127, R129, R141 | RESISTOR 330Ω, ¼W, 5% | 1300295 | 8 |
| 5 | R132, R134, R136, R138, R140 | RESISTOR 150Ω, ¼W, 5% | 1300250 | 7 |
| 6 | C1 THRU C6 | CAPACITOR .68μF, 35V, 20% TANT | 1000067 | 6 |
| 113 | C7 THRU C119 | CAPACITOR .01μF, 100V, 20% DISC | 1001610 | 5 |
| 1 | | ETCHED CIRCUIT BOARD | 5009805 | 4 |
| REF | | MODULE ECO HISTORY | B-MH-M8103-C-6 | 3 |
| REF | | ASSY/DRILLING HOLE LAYOUT | E-BH-M8103-0-5 | 2 |
| REF | | X-Y COORDINATE HOLE LOCATION | K-CO-M8103-0-4 | 1 |
| QTY | REF DESIGNATION | DESCRIPTION | PART NO. | ITEM NO. |

PARTS LIST

| | | | | |
|---|---|---|---|---|
| 1 | R143 | RESISTOR 1K, ¼W, 5% | 1300365 | 39 |
| 1 | | HANDLE, MODULE | E-PS-1210711-2 | 38 |
| 12 | | EYELET | 9006732 | 37 |
| 1 | E116 | IC DEC 74187 (OR 3301) | 23-C44A2 | 36 |
| 1 | E113 | IC DEC 74187 (OR 3301) | 23-C43A2 | 35 |
| 1 | E114 | IC DEC 74187 (OR 3301) | 23-C42A2 | 34 |
| 1 | E115 | IC DEC 74187 (OR 3301) | 23-C41A2 | 33 |
| 1 | E108 | IC DEC 74187 (OR 3301) | 23-C12A2 | 32 |
| 1 | E106 | IC DEC 74187 (OR 3301) | 23-C11A2 | 31 |
| 1 | E105 | IC DEC 74187 (OR 3301) | 23-C47A2 | 30 |
| 1 | E107 | IC DEC 74187 (OR 3301) | 23-C09A2 | 29 |
| 1 | E100 | IC DEC 74187 (OR 3301) | 23-C05A2 | 28 |
| 1 | E99 | IC DEC 74187 (OR 3301) | 23-C07A2 | 27 |
| 1 | E98 | IC DEC 74187 (OR 3301) | 23-C31A2 | 26 |
| 1 | E97 | IC DEC 74187 (OR 3301) | 23-C30A2 | 25 |
| 1 | E92 | IC DEC 74187 (OR 3301) | 23-C04A2 | 24 |
| QTY | REF DESIGNATION | DESCRIPTION | PART NO. | ITEM NO. |

PARTS LIST

AA2, AV1, BA2, BV1, CA2, CV1, DA2, DV1, EA2, EV1, FA2, FV1

AC2, AN2, AH1, AT1, BC2, BN2, BH1, BT1, CC2, CN2, CH1, CT1, DC2, DN2, DH1, DT1, EC2, EN2, EH1, ET1, FC2, FN2, FH1, FT1

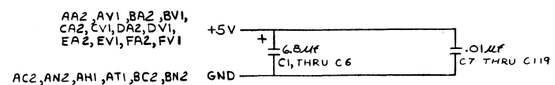


| | | |
|---|---|---|
| DEC 74167 (or 3301) | B | 16 |
| DEC 74S174 | B | 16 |
| DEC 74S153 | B | 16 |
| IC TYPE | GND | +5V |

GND AND 5V ARE USUALLY PIN 7 AND 14 RESPECTIVELY. EXCEPTIONS ARE STATED ABOVE

IC PIN LOCATIONS

| ITEM NO. | AWG | FROM PT | TO PT |
|---|---|---|---|

JUMPER LIST

| REV | CHG NO. | ORIGINATED | CHK |
|---|---|---|---|
| A | M8103-00003 | 7-5-72 | JENKINS |
| B | M8103-00004 | 7-6-72 | JENKINS |
| C | M8103-00005 | 7-10-72 | JENKINS |
| D | M8103-00006 | 7-24-72 | JENKINS |
| E | M8103-00007 | 7-28-72 | JENKINS |
| F | M8103-00008 | 8-4-72 | JENKINS |
| G | M8103-00009 | 8-9-72 | JENKINS |
| H | M8103-00010 | 8-22-72 | JENKINS |

REVISIONS

| DEC NO | EIA NO. | DEC NO | EIA NO. |
|---|---|---|---|

SEMICONDUCTOR CONVERSION CHART

ETCH BOARD REV TC

| | |
|---|---|
| DRN | DATE 1-6-72 |
| CHK | DATE 2-2-72 |
| ENG | DATE |
| PROJ ENG | DATE 7-7-72 |
| PROD | DATE |
| NEXT HIGHER ASSY | |
| SCALE 2/1 | SHEET 1 OF 15 |

DIGITAL EQUIPMENT CORPORATION, MAYNARD, MASSACHUSETTS

TITLE: ROM & ROM CONTROL

SIZE E | CODE CS | NUMBER M8103-0-1 | REV 11

DIST

ESM8103-0-1 REV H

This drawing and specifications, herein, are the property of Digital Equipment Corporation and shall not be reproduced or copied or used in whole or in part as the basis for the manufacture or sale of items without written permission.



74S174 E111 (63:58) — D5 D4 D3 D2 D1 DØ — R5 R4 R3 R2 R1 RØ — CLR CLK
- FS2 → RACA UBRK H
- FU1 → RACA UBRX H
- FM2 → RACA USRXØ1 H
- FS1 → RACA USRXØØ H
- FP2 → RACA UDRXØ1 H
- FP1 → RACA UDRXØØ H

74S174 E112 (57:52) — D5 D4 D3 D2 D1 DØ — R5 R4 R3 R2 R1 RØ — CLR CLK
- FU2 → RACA USRK H
- FT2 → RACA UDRKØ1 H
- FV2 → RACA UDRKØØ H
- FU2 → RACA UCCLØ2 H
- FL2 → RACA UCCLØ1 H
- FK2 → RACA UCCLØØ H

74S174 E110 (51:46) — D5 D4 D3 D2 D1 DØ — R5 R4 R3 R2 R1 RØ — CLR CLK
- FR1 → RACA UPCA H
- FR2 → RACA UPCBØ1 H
- FN1 → RACA UPCBØØ H
- FM1 → RACA USHFØ1 H
- FL1 → RACA UIRKA H

RACA UIRK H → 74S11 EG9 → CL1

RACB ROM47 H
RACB ROM46 H

RACA CLR RBR L

UBCE ROM INIT H (EJ1) → 74S04 ES7

TIGC T2 L (DK2) → 74S04 E78
- R133 NOT USED → +5V
- R134 150Ω

+5V

R1 R2 R3 R4 330Ω 680Ω 330Ω 680Ω
R5 R6 R7 R8 330Ω 680Ω 330Ω 680Ω
R9 R10 R11 R12 330Ω 680Ω 330Ω 680Ω
R13 R14 R15 R16 330Ω 680Ω 330Ω 680Ω
R17 R18 R19 R20 330Ω 680Ω 330Ω 680Ω
R21 R22 R23 R24 330Ω 680Ω 330Ω 680Ω
R25 R26 R27 R28 330Ω 680Ω 330Ω 680Ω
R29 R30 R31 R32 330Ω 680Ω 330Ω 680Ω

74187 E116 23-C44A2 ROM (63:60) — A7 A6 A5 A4 A3 A2 A1 AØ — M3 M2 M1 MØ — CS1 CSØ

74187 E113 23-C43A2 ROM (59:56) — A7 A6 A5 A4 A3 A2 A1 AØ — M3 M2 M1 MØ — CS1 CSØ
- RACC RARBØ1 H
- RACC RARBØØ H

74187 E114 23-C42A2 ROM (55:52) — A7 A6 A5 A4 A3 A2 A1 AØ — M3 M2 M1 MØ — CS1 CSØ

74187 E115 23-C41A2 ROM (51:48) — A7 A6 A5 A4 A3 A2 A1 AØ — M3 M2 M1 MØ — CS1 CSØ

RACA RARBØ2 H
RACA RARBØ3 H
RACA RARBØ4 H
RACA RARBØ5 H
RACA RARBØ6 H
RACA RARBØ7 H

UBCE ROM INIT H (EJ1) → 74S64 EKD1 → RACA ZAP L
RACB UBSDØ1 H
TMCC ABORT H (EF1)

TIGE TS2 L (EB1) → 74S04 E93
- R139 NOT USED → +5V
- R140 150Ω

UBCB PE ABORT L (CK1)
+5V → R143 1K → 74S04 E52

RACL RADR Ø7 H → 74S04 E93 → RARB Ø7 74S74 E73 → RACA +3V H

TIGD T3 L (EJ2) → 74S04 E93
- R131 NOT USED → +5V
- R132 150Ω

RACA CLKA RAR H

RACA CLK RAR H

74S174 E104 RARB (Ø6:Ø2) — D5 D4 D3 D2 D1 DØ — R5 R4 R3 R2 R1 RØ — CLR CLK
- RACL RADRØ6 H
- RACL RADRØ5 H
- RACL RADRØ4 H
- RACL RADRØ3 H
- RACL RADRØ2 H

74S04 E93 → RACA +3V H

REVISIONS | REV | CHANGE NO | CHK

DEC FORM NO DRD 102-B

ROM BITS (63:48) SLOT 9

| FIRST USED ON OPTION/MODEL | QTY. | DESCRIPTION | PART NO. | ITEM NO. |
|---|---|---|---|---|
| 11/45 | | PARTS LIST | | |

UNLESS OTHERWISE SPECIFIED DIMENSION IN INCHES. TOLERANCES
DECIMALS: .XXX = .005, .XX = .02, .X = .1 — ANGLES: ±0° 30'
REMOVE BURRS AND BREAK SHARP CORNERS SURFACE QUALITY ✓

| | | |
|---|---|---|
| DRN. | DATE 11/14/71 | digital EQUIPMENT CORPORATION MAYNARD, MASSACHUSETTS |
| CHK'D. | DATE | |
| ENG. | DATE 3-21-72 | TITLE |
| PROJ. ENG. | DATE 3-21-72 | ROM & ROM CONTROL (RACA) |
| PROD. | DATE | |
| MATERIAL | NEXT HIGHER ASSY. | SIZE D CODE CS NUMBER M 8103-0-1 REV H |
| FINISH | B-DD-KB11-0 | |
| | SCALE | |
| | SHEET 2 OF 15 | DIST. |

This drawing and specifications, herein, are the property of Digital Equipment Corporation and shall not be reproduced or copied or used in whole or in part as the basis for the manufacture or sale of items without written permission.

74S174 E102 (45:41)
D5 D4 D3 D2 D1 D0 CLR CLK
R5 R4 R3 R2 R1 R0
7 FA1 RACB UPWEØ1 H
10 FB1 RACB UPWEØØ H
12 FD1 RACB UPADØ2 H
15 FF1 RACB UPADØ1 H
2 FJ1 RACB UPADØØ H
5

74S174 E103 (40:35)
10 FE2 RACB UBSDØ1 H
5 FE1 RACB UBSDØØ H
12 FF2 RACB UBAXØ1 H
2 FD2 RACB UBAXØØ H
15 FH2 RACB UIBSØ1 H
7 FC1 RACB UIBSØØ H

RACA CLR RBR L
TIGC TIB L
R135 NOT USED
DR1 13 74S04 E78 12
R136 150Ω
+5V
TIGC TIB H (BJ1)
RACB CLKRBR (34:28) H

R65 R66 R67 R68 R69 R70 R71 R72 R73 R74 R75 R76 R77 R78 R79 R80 R81 R82 R83 R84 R85 R86 R87 R88 R89 R90 R91 R92 R93 R94 R95 R96
330Ω 680Ω

RACA RARBØ7 H
RACA RARBØ6 H
RACA RARBØ5 H
RACA RARBØ4 H
RACA RARBØ3 H
RACA RARBØ2 H
RACA RARBØ1 H
RACA RARBØØ H

74187 E108 23-C12A2 ROM (47:44)
A7 A6 A5 A4 A3 A2 A1 A0 CS1 CSØ
M3 M2 M1 MØ
RACB ROM47 H
RACB ROM46 H

74187 E106 23-C11A2 ROM (43:40)
RACB ROM45 H
RACB ROM44 H
RACB ROM43 H
RACB ROM42 H
RACB ROM41 H
RACB ROM40 H

74187 E105 23-C47A2 ROM (39:36)

74187 E107 23-C09A2 ROM (35:32)
RACB ROM34 H
RACB ROM33 H
RACB ROM32 H

RACA +3V H
RACB ROM4ØH
TIGC TIB H (BJ1)
RACA CLR RBR L
74S74 E73
D C Ø 1 2 3 4 5 6
BJ1 RACB ROM4Ø B L

ROM BITS (47:32) SLOT 9

| FIRST USED ON OPTION/MODEL | QTY. | DESCRIPTION | PART NO. | ITEM NO. |
|---|---|---|---|---|
| 11/45 | | PARTS LIST | | |

UNLESS OTHERWISE SPECIFIED DIMENSION IN INCHES. TOLERANCES
DECIMALS: .XXX = .005, .XX = .02, .X = .1 — ANGLES: ±0° 30'
REMOVE BURRS AND BREAK SHARP CORNERS SURFACE QUALITY
MATERIAL
FINISH

DRAD — DATE 11/9/71
CHK'D — DATE 3/21/72
ENG — DATE 3-21-72
PROJ. ENG. — DATE 3-21-72
PROD. — DATE
NEXT HIGHER ASSY. B-DD-KB11-Ø
SCALE
SHEET 3 OF 15

digital EQUIPMENT CORPORATION MAYNARD MASSACHUSETTS

TITLE: ROM & ROM CONTROL (RACF)

| SIZE | CODE | NUMBER | REV. |
|---|---|---|---|
| D | CS | M8103-Ø-1 | H |

DIST.

REVISIONS | REV | CHANGE NO. | CHK

DEC FORM NO DRD 102-B

This drawing and specifications, herein, are the property of Digital Equipment Corporation and shall not be reproduced or copied or used in whole or in part as the basis for the manufacture or sale of items without written permission.

RACB ROM34 H
RACB ROM32 H
74S174 E94 (34,32:28)
D5 D4 D3 D2 D1 D0 CLR CLK
R5 R4 R3 R2 R1 R0
FB2 ES2 EU1 ES1 ER2 ER1
RACC USHC01 H
RACC UBCT02 H
RACC UBCT01 H
RACC UBCT00 H
RACC UMSC02 H
RACC UMSC01 H

RACA +3V H
RACB ROM33 H
RACB CLKRBR (34:28) H
74S74 E117 (33)
EDI EEI
RACC USHC00 H
RACC USHC00 L

UBCE ROM INIT H (EJI)
74S04 E72

TIGC TIB L (DRI) 3
74S04 E79

RACA +3V H
74S74 E117 (27)
OUE OUL
RACC UMSC00 H
RACC UMSC00 L

RACA CLR RBR L

74S174 E95 (26:21)
15 EN1 2 EP1 5 EM1 10 EX1 12 EU1 7 EA2
RACC UBSC02 H
RACC UBSC01 H
RACC UBSC00 H
RACC UAMX01 H
RACC UAMX00 H
RACC UBMX01 H

RACD ROM35 H
74S174 E96 (20:15)
7 EM2 10 EK2 5 EL2 12 EV2 2 ET2 15 EV2
RACC UBMX00 H
RACC UKMX01 H
RACC UKMX00 H
RACC UALU2 H
RACC UALU1 H
RACC UALU0 H

+5V

R97 330 R98 680 R99 330 R100 680
R101 330 R102 680 R103 330 R104 680
R105 330 R106 680 R107 330 R108 680
R109 330 R110 680 R111 330 R112 680 R113 330 R114 680 R115 330 R116 680
R117 330 R118 680 R119 330 R120 680 R121 330 R122 680 R123 330 R124 680
R125 330 R126 680 R127 330 R128 680

74187 E100 23-C08A2 ROM (31:28)
74187 E99 23-C07A2 ROM (27:24)
74187 E98 23-C39A2 ROM (23:20)
74187 E97 23-C38A2 ROM (19:16)
A7 A6 A5 A4 A3 A2 A1 A0 CS1 CS0 M3 M2 M1 M0

RACD RARA03 H
RACD RARA02 H
RACD RARA01 H
RACD RARA00 H

RACL RADR01 H
RACL RADR00 H
RACL RADR06 H
RACL RADR05 H
RACL RADR04 H
74S174 E87 RARB (01:00)
RACC RARB01 H
RACC RARB00 H

RACC RARA06 H
RACC RARA05 H
RACC RARA04 H

RACL RADR07 H
RACA CLK RAR H
74S74 E109 RARA 07
RACC RARA07 H

RACA ZAP L
RACA CLKA RAR H
RACA +3V H

ROM BITS (31:16) SLOT 9

| FIRST USED ON OPTION/MODEL | QTY. | DESCRIPTION | PART NO. | ITEM NO. |
|---|---|---|---|---|
| 11/45 | | PARTS LIST | | |

UNLESS OTHERWISE SPECIFIED DIMENSION IN INCHES. TOLERANCES
DECIMALS .XXX = .005 .XX = .02 .X = .1 ANGLES ±0° 30'
REMOVE BURRS AND BREAK SHARP CORNERS SURFACE QUALITY ✓
MATERIAL — — —
FINISH — — —

DRN. Pierce DATE 2/9/72
CHK'D. DATE 2/9/72
ENG. DATE 3-21-72
PROG. ENG. DATE 3-21-72
PROD. DATE

digital EQUIPMENT CORPORATION MAYNARD, MASSACHUSETTS

TITLE: ROM & ROM CONTROL (RACC)

NEXT HIGHER ASSY. B-DD-KD11-D
SIZE D CODE CS NUMBER M8103-0-1 REV H
SCALE — — —
SHEET 4 OF 15
DIST.

REVISIONS | REV | CHANGE NO. | CHK

DEC FORM NO DRD 102-B

SIZE D CODE CS NUMBER M8103-0-1 REV H

This drawing and specifications, herein, are the property of Digital Equipment Corporation and shall not be reproduced or copied or used in whole or in part as the basis for the manufacture or sale of items without written permission.



74187 E92 23-C09A2 ROM (15:12)
74187 E91 23-C03A2 ROM (11:08)
74187 E89 23-C02A2 ROM (07:04)
74187 E90 23-C01A2 ROM (03:00)

RACD ROW15 H
RACD UCFEN L
RACD UBFEN L
RACD UAFEN L
RACA +3V H
RACD UBEF03 H
RACD UBEF03 L
RACD UBEF02 L
RACD UBEF01 L
RACD UBEF00 L
RACD UBEF01 L
RACD UBEF00 L
RACD UADR07 L
RACD UADR06 L
RACD UADR05 L
RACD UADR04 L
RACD UADR03 L
RACD UADR02 L
RACD UADR01 L
RACD UADR00 L

R33 330 R34 680 R35 330 R36 680 R37 330 R38 680 R39 330 R40 680
R41 330 R42 680 R43 330 R44 680 R45 330 R46 680 R47 330 R48 680
R49 330 R50 680 R51 330 R52 680 R53 330 R54 680 R55 330 R56 680
R57 330 R58 680 R59 330 R60 680 R61 330 R62 680 R63 330 R64 680

+5V

RACD RAR00 H
RACD RAR01 H
RACD RAR02 H
RACD RAR03 H

RACC RAR07 H
RACC RAR06 H
RACC RAR05 H
RACC RAR04 H

74S174 E88 RARA (03:00)
74S174 E86 RAR (05:00)
74S74 E109 RAR 07

EC1 RACD RAR07 H
DS2 RACD RAR06 H
EH2 RACD RAR05 H
EE2 RACD RAR04 H
EF2 RACD RAR03 H
DV2 RACD RAR02 H
DT2 RACD RAR01 H
ED2 RACD RAR00 H

RACA ZAP L
RACA CLKA RAR H
RACL RADR00 H
RACL RADR01 H
RACL RADR02 H
RACL RADR03 H
RACL RADR04 H
RACL RADR05 H
RACL RADR06 H
RACL RADR07 H

ROM BITS (15:00) SLOT 9

| FIRST USED ON OPTION/MODEL | QTY. | DESCRIPTION | PART NO. | ITEM NO. |
|---|---|---|---|---|
| 11/45 | | PARTS LIST | | |

UNLESS OTHERWISE SPECIFIED DIMENSION IN INCHES. TOLERANCES
DECIMALS .XXX = .005 .XX = .02 .X = .1 ANGLES ±0° 30'
REMOVE BURRS AND BREAK SHARP CORNERS SURFACE QUALITY ✓
MATERIAL
FINISH

DRN. DATE 11/9/71
CHK DATE
ENG DATE 3-21-72
PROJ. ENG. DATE 3-21-72
PROD. DATE

digital EQUIPMENT CORPORATION MAYNARD MASSACHUSETTS

TITLE ROM & ROM CONTROL (RACD)

NEXT HIGHER ASSY. B-DD-KB11-0
SIZE D CODE CS NUMBER M8103-0-1 REV. H
SCALE
SHEET 5 OF 15
DIST.

REVISIONS | REV. | CHANGE NO. | CHK

BRUNING 40-522 15840
DEC FORM NO DRD 102-B

This drawing and specifications, herein, are the property of Digital Equipment Corporation and shall not be reproduced or copied or used in whole or in part as the basis for the manufacture or sale of items without written permission.



RACJ AFIRØ3 (1) L
RACE BF1 = Ø L
RACJ AFIR 15 (Ø) H
RACJ AFIR 14 (1) H
RACJ AFIR 13 (1) H
RACJ AFIR 12 (1) H
RACE BF2 = 4 L
74S28 E41
74S04 E6
74S64 E35
RACE R CLASS H
RACJ AFIR11 (1) H
RACJ AFIR1Ø (1) H
RACJ AFIRØ9 (Ø) H
RACJ BUF AFIRØ8 (1) H
RACJ AFIR15 (Ø) H
RACJ AFIRØ6 (1) H
RACJ AFIRØ8 (1) H
74S1Ø E28
74S1Ø E28
RACJ AFIR11 (1) H
RACJ AFIR1Ø (Ø) H
RACJ AFIRØ9 (1) H
74S1Ø E29
RACE BF2=5 L
RACJ AFIRØ4(1) L
74S04 E6
74S64 E44
RACE AØ RABØØ L
74S64 E45
RACE AØ RABØ1 L
RACE (MUL+ASHC+MFP) H
74S64 E22
RACE BFI =Ø L
RACE +3V H
RACJ BUF AFIR 11 (Ø) L
RACJ AFIRØ8 (1) H
RACJ AFIRØ7 (Ø) H
RACJ AFIRØ6 (1) H
74S1Ø E53
RACJ AFIRØ5 (1) L
74S04 E6
RACE BF3 = 5 L
74S64 E33
RACE AØ RABØ2 L
RACE SMØ L
RACJ AFIR Ø9 (Ø) H
RACJ AFIR 1Ø (Ø) H
RACJ AFIR 11 (Ø) H
74S1Ø E29
RACJ AFIR12 (1) L
RACJ AFIR13 (1) L
RACJ AFIR14 (1) L
RACJ AFIR12 (Ø) L
RACJ AFIR13 (Ø) L
RACJ AFIR 14 (Ø) L
RACE BIN *SMØ H
74S64 E42
RACE BF1=Ø L
RACJ AFIR14 (Ø) H
RACJ AFIR13 (Ø) H
RACJ AFIR12 (Ø) H
74S1Ø E4Ø
RACJ AFIR 1Ø (Ø) H
RACJ AFIR Ø9 (Ø) H
RACJ AFIR 15 (Ø) L
RACE +3 V H
RACJ AFIR Ø8 (Ø) H
RACJ AFIR Ø6 (1) H
RACJ AFIR 11 (1) L
74S00 E31
74S00 E31
RACE JMP+JSR+SWAB H
74S64 E32

TMCB BRQ TRUE H
RACE BR INST H
RACF (HALT:OPCODE7) H
RACE R CLASS H
RACH TCLASE L
RACH DF 7+ BRQ H
RACH PSWAB H
RACE JMP+JSR + SWAB H
RACH DMØ H
ALI
74S64 E7
RACE AØ RABØ3 L

RACJ BUF AFIR11 (Ø) L
RACE BFI = Ø L
RACE +3V H
RACJ AFIR15 (1) L
RACH AFIR1ØA (1) L
RACH AFIRØ9A (1) L
RACJ AFIRØ8 (1) L
74S64 E24
RACE BR INST H
74S04 E39
RACE AØ RABØ4 L

RACJ AFIR 13 (Ø) H
RACJ AFIR 12 (1) H
RACJ AFIR 19 (Ø) H
RACJ AFIR 13 (1) H
RACJ AFIR 14 (1) H
RACJ AFIR 12 (Ø) H
74S64 E43
RACF UCLASS H
74S1Ø E1Ø
RACE AØ RABØ5 L
RACE BIN L
RACJ AFIR 12 (1) H
RACJ AFIR 13 (Ø) H
RACJ AFIR 14 (Ø) H
74S1Ø E4Ø
RACE BF1 = 7 L
RACJ AFIR11 (1) H
RACH AFIR1ØA (Ø) H
RACH AFIRØ9A (Ø) H
74S1Ø E48
RACE BF2 = 4 L
74S04 E34
RACE +3V H

BIT FIELD

| Ø | 1 | 2 | 3 | 4 | 5 |
|---|---|---|---|---|---|
| 15 14 13 12 | 11 10 | Ø9 Ø8 | Ø7 Ø6 | Ø5 Ø4 | Ø3 Ø2 Ø1 ØØ |
| IR | | SM | SF | DM | DF |

NOTE: UCLASS = (MUL: ASHC) * DMØ + SOB + BIN
RCLASS = (CLR. B: ASL. B) + MFP + SXT + XOR
TCLASS EXCLUDES [MFP + NEG. B + (- DMØ)] FROM RCLASS WHEN COMBINED

A-FORK LOGIC SLOT 9

| FIRST USED ON OPTION/MODEL | QTY. | DESCRIPTION | PART NO. | ITEM NO. |
|---|---|---|---|---|
| 11/45 | | PARTS LIST | | |

UNLESS OTHERWISE SPECIFIED DIMENSION IN INCHES. TOLERANCES
DECIMALS .XXX = .005 .XX = .02 .X = .1 ANGLES ±0° 30'
REMOVE BURRS AND BREAK SHARP CORNERS SURFACE QUALITY ✓
MATERIAL
FINISH

DRN DATE 11/9/71
CHK'D DATE 3/21/72
ENG. DATE 3-21-72
PROJ. ENG. DATE 3/21/72
PROD. DATE 3/30/72
NEXT HIGHER ASSY. B-DD-KB11-Ø

digital EQUIPMENT CORPORATION MAYNARD MASSACHUSETTS

TITLE ROM & ROM CONTROL (RACE)

SIZE D CODE CS NUMBER M8103-Ø-1 REV H
SCALE
SHEET 6 OF 15 DIST.

REVISIONS | REV | CHANGE NO. | CHK

DEC FORM NO DRD 102-B

This drawing and specifications, herein, are the property of Digital Equipment Corporation and shall not be reproduced or copied or used in whole or in part as the basis for the manufacture or sale of items without written permission.



RACF BF01=0 L

RACJ AFIR15(0) H
RACJ AFIR14(0) H
RACJ AFIR13(0) H
RACJ AFIR12(0) H
74520 E41
RACJ AFIR03(1) H
RACJ AFIR07(0) H
RACJ AFIR06(0) H
RACJ AFIR05(0) H
RACJ AFIR04(0) H
74520 E16
RACJ AFIR11(0) H
RACJ AFIR10(0) H
RACJ AFIR09(0) H
RACJ AFIR08(0) H
74520 E30
74S64 E18
RACF IR(11:8) 0 L

RACJ AFIR06(0) H
RACJ AFIR00(1) H
RACF(HALT:OPCODE7) H
RACH BIN*(-SM01) L
RACJ AFIR09(1) H
RACJ AFIR05(0) H
RACJ AFIR03(1) H
RACJ AFIR04(1) H
74S64 E5
RACF A1 RAB00 L

RACJ AFIR15(0) L
RACE BIN L
RACE BF1=7 L
RACJ BUF AFIR11(0) L
RACH BF2=7 L
RACE +3V H
RACH DM0 L
74S64 E23
RACJ AFIR07(0) H
RACJ AFIR01(1) H
RACF UCLASS H
RACJ AFIR10(1) H
RACJ AFIR05(0) H
RACJ AFIR04(1) H
RACH +3V H
74S64 E17
RACF A1 RAB01 L

RACF BF01=0 L
RACF IR(11:8) 0 L
RACJ AFIR07(1) L
RACJ AFIR06(0) L
RACE +3V H
74S64 E21
RACJ AFIR02(1) H
RACF(RTS:CCOP) H
RACJ BUF AFIR11(1) H
RACJ AFIR05(1) H
RACH +3V H
74S64 E8
RACF A1 RAB02 L

RACJ AFIR11(1) H
RACJ AFIR10(1) H
RACJ AFIR09(0) H
RACJ AFIR08(1) H
74S20 E30
RACE +3V H
RACE BF1=0 L
74S64 E20
RACF XCLASS H
RACH DM0 L
RACE BF3=5 L
RACJ AFIR07(1) H
RACJ AFIR06(0) H
RACJ AFIR07(0) H
RACJ AFIR15(0) H
74S00 E58
74S10 E60
RACJ AFIR04(0) H
RACJ AFIR05(0) H
RACJ AFIR03(1) H
74S10 E3
74S00 E4
RACF A1 RAB05 L

RACE BIN * SM0 H
RACH DF7 * BRQ H
RACH DM0 H
74S10 E10
RACF A2 RAB03 L

RACF XCLASS H
74S04 E34
RACF A2 RAB05 L

RACJ AFIR15(1) L
IRCH C(1) H
RACH AFIR09A(1) H
IRCH Z(1) H
RACH AFIR10A(0) H
IRCH N(1) H
RACH AFIR09A(0) H
IRCH V(1) H
RACH AFIR10A(1) H
BA1
BJ2
BH2
BF1
74S00 E58
74S10 E59
74S10 E48
74S64 E47
RACF TRUE1 H

RACJ AFIR15(0) L
RACH AFIR09A(1) H
IRCH Z(1) H
IRCH N(1) H
IRCH V(0) H
RACH AFIR10A(1) H
IRCH N(0) H
IRCH V(1) H
RACH AFIR10A(0) H
RACH AFIR09A(0) H
(BJ2)
(BH2)
BF2
BK2
(BF1)
74S00 E58
74S10 E59
74S10 E48
74S00 E58
74S64 E46
RACF TRUE2 H

UCLASS = (MUL:ASHC) * DM0 + SOB + BIN
XCLASS = MARK + MTP + MFP * DM0

A-FORK LOGIC SLOT 9

| FIRST USED ON OPTION/MODEL | QTY. | DESCRIPTION | PART NO. | ITEM NO. |
|---|---|---|---|---|
| 11/45 | | PARTS LIST | | |

UNLESS OTHERWISE SPECIFIED DIMENSION IN INCHES. TOLERANCES
DECIMALS .XXX = .005 .XX = .02 .X = .1 ANGLES ±0° 30'
REMOVE BURRS AND BREAK SHARP CORNERS SURFACE QUALITY ✓
MATERIAL —//—
FINISH —//—

DRN Z. Carberry DATE 7/15/71
CHKD DATE 5/17/72
ENG DATE 7/21/72
PROJ ENG. DATE 7/21/72
PROD. DATE
NEXT HIGHER ASSY. B-CD-KB11-
SCALE —//—
SHEET 7 OF 15

digital EQUIPMENT CORPORATION MAYNARD MASSACHUSETTS

TITLE
ROM & ROM CONTROL
(RACF)

SIZE D CODE CS NUMBER 1.1810 3-0-1 REV. H
DIST.

REVISIONS REV. CHANGE NO CHK

DEC FORM NO 102-B

This drawing and specifications, herein, are the property of Digital Equipment Corporation and shall not be reproduced or copied or used in whole or in part as the basis for the manufacture or sale of items without written permission.



RACJ AF IR11 (1) H
RACJ AF IR1Ø (1) H
RACJ AF IR09 (1) H
74S1Ø E29
RACH BF2=7 L

RACJ BUF AF IRØ8 (1) H
RACE BR INST H
74S0Ø E04
RACH A2 RABØ2 L

RACF TRUE 2 H
74S0Ø E04
RACH A2 RABØ1 L

PDRA BRMXIØ H (BD1)
74S04 E6
RACH +3V H
74S74 E36
RACH AF IR1ØA (1) H
RACH AF IR1ØA (Ø) H

PDRA BRMXØ9 H (BC1)
74S74 E36
RACH AF IRØ9A (1) H

RACJ CLKAFIR L
74S94 E27
74S74 E36
RACH AF IRØ9A (Ø) H

RACE BF1=7 L
74S04 E34
RACH NEG.B*DMØ H
RACF TRUE 1 H
RACE BR INST H
74S64 E12
RACH A2 RABØØ L

FRMJ FP PRESENT L
BS1
74S04 E57
RACJ AFIR1S (1) H
R191 330 +5V
R192 68Ø

RACJ AF IR11 (Ø) H
RACJ AF IRØ8 (Ø) H
RACJ AF IRØ7 (1) H
RACJ AF IRØ6 (1) H
74S2Ø E16
74S04 E6
RACH PSWAB H

RACJ AF IR11 (Ø) H
RACJ AF IR1Ø (Ø) H
74S0Ø E31
RACE BF1=Ø L
RACE BF1=7 L
74S1Ø E1Ø
RACH BIN * (-SMØ1) L

RACJ AF IRØ8 (1) H
RACJ AF IRØ7 (Ø) H
RACJ AF IRØ6 (Ø) H
74S1Ø E28
RACE +3V H
RACE BF1=Ø L
RACE BF2=5 L
74S64 E9
RACH NEG.B * DMØ H

RACH +3V H
RACJ AF IRØ5 (Ø) H
RACJ AF IR04 (Ø) H
RACJ AF IRØ3 (Ø) H
74S1Ø E3
74S04 E57
RACH AØ RABØ7 L
74S04 E34
RACH DMØ H
RACH DMØ L

TMCB BRQ TRUE L AK1
74S0Ø E4
RACH DFT+BRQ H

RACJ AF IRØØ (1) H
RACJ AF IRØ1 (1) H
RACJ AF IRØ2 (1) H
74S1Ø E3
RACH DFT L

RACH +3V H
RACH DMØ L
RACJ AF IR11 (1) H
RACJ AF IR1Ø (Ø) H
RACJ AF IRØ7 (Ø) H
RACJ BUF AF IRØ8 (1) H
RACJ AF IRØ9 (1) H
RACJ AF IRØ7 (Ø) H
RACJ AF IRØ6 (Ø) H
74S0Ø E31
74S64 E19
RACH TCLASS L
RACE BIN * SMØ H
RACE RCLASS H
RACE BF1=7 L
RACE BF1=Ø L
RACE SMØ L
RACH DMØ H
RACE JMP+JSR+SWAB H
RACH PSWAB H
74S64 E11
RACH A1 RABØ4 L

RCLASS=(CLR.B:ASL.B)+MFP+SXT+XOR
TCLASS EXCLUDES[MFP+NEG.B+(-DMØ)] FROM RCLASS

RACC UMSCØ2 H
RACC UMSCØØ H
RACH +3V H
74S1Ø E AØ

RACC UMSCØ1 H
74S04 E56
RACJ AFIR11 (Ø) H
RACE SMØ L
74S11 E55

RACE BIN L
74S04 E56
RACJ BUF AFIR11 (1) H
RACH AFIR1ØA (1) H
74S1Ø EGØ

RACJ AFIRØ5 (Ø) H
RACH DMØ L
74S11 E55

RACE BR INST H
74S04 E56

TMCB BRQ TRUE H (AL1)
RACE BR INST H
74S64 E54
ANI
RACH BUST H

A—FORK LOGIC
SLOT 9

| FIRST USED ON OPTION/MODEL | QTY. | DESCRIPTION | PART NO. | ITEM NO. |
|---|---|---|---|---|
| 11/45 | | PARTS LIST | | |

UNLESS OTHERWISE SPECIFIED DIMENSION IN INCHES. TOLERANCES
DECIMALS: .XXX = .005, .XX = .02, .X = .1 | ANGLES: ±0° 30'
REMOVE BURRS AND BREAK SHARP CORNERS SURFACE QUALITY ✓
MATERIAL —//—
FINISH —//—

DRN. T.P. Hughes DATE 7-7-71
CHK'D. [illegible] DATE 7/21/72
ENG. [illegible] DATE 7-21-72
PROJ. ENG. [illegible] DATE 7-21-72
PROD. [illegible] DATE [illegible]
NEXT HIGHER ASSY. B-DD-KB11 C
SCALE —//—
SHEET 8 OF 15

digital EQUIPMENT CORPORATION MAYNARD MASSACHUSETTS

TITLE
ROM&ROM CONTROL
(RACH)

SIZE D | CODE | NUMBER 1818Ø3-Ø-1 | REV. H | DIST.

REVISIONS | REV | CHANGE NO. | CHK

DEC FORM NO DRD 102-B

8 7 6 5 4 3 2 1

This drawing and specifications, herein, are the property of Digital Equipment Corporation and shall not be reproduced or copied or used in whole or in part as the basis for the manufacture or sale of items without written permission.

R137 NOT USED +5V

R138 150Ω

TIGC TIB H BJ1

RACA UIRKA H

UBCB BUS CORD H BR1

74S64 E39

RACJ CLK AFIR L

74S04 E27

PDRA BRMX 15 H BP1

RACJ AFIR15(1)H

RACJ AFIR15(Ø)H

PDRA BRMX 14 H BN1

RACJ AFIR 14(1)H

RACJ AFIR14(Ø)H

PDRA BRMX 13 H BM1

RACJ AFIR 13(1)H

RACJ AFIR 13(Ø)H

PDRA BRMX 12 H BL1

RACJ AFIR 12(1)H

RACJ AFIR 12(Ø)H

PDRA BRMX 11H BE1

RACJ AFIR 11(1)H

RACJ AFIR 11(Ø)H

RACJ BUF AFIR11(1)H

PDRA BRMX 1Ø H BD1

RACJ AFIR1Ø(1)H

RACJ AFIR 1Ø(Ø)H

PDRA BRMX Ø9 H BC1

RACJ AFIRØ9(1)H

RACJ AFIR Ø9(Ø)H

PDRA BRMX Ø8 H BB1

RACJ AFIR Ø8(1)H

RACJ AFIR Ø8(Ø)H

RACJ BUF AFIRØ8(1)H

PDRA BRMX Ø7 H AU1

RACJ AFIRØ7(1)H

RACJ AFIRØ7(Ø)H

PDRA BRMX Ø6 H AS1

RACJ AFIRØ6(1)H

RACJ AFIRØ6(Ø)H

PDRA BRMX Ø5 H AR1

RACJ AFIRØ5(1)H

RACJ AFIRØ5(Ø)H

PDRA BRMX Ø4 H AP1

RACJ AFIRØ4(1)H

RACJ AFIRØ4(Ø)H

PDRA BRMX Ø3 H AT2

RACJ AFIRØ3(1)H

RACJ AFIRØ3(Ø)H

PDRA BRMX Ø2 H AS2

RACJ AFIRØ2(1)H

RACJ AFIRØ2(Ø)H

PDRA BRMX Ø1 H AR2

RACJ AFIRØ1(1)H

RACJ AFIRØ1(Ø)H

PDRA BRMX ØØ H AP2

RACJ AFIRØØ(1)H

RACJ AFIRØØ(Ø)H

74S40 E15

INSTRUCTION REG. (A-FCHK COPY) SLOT 9

| FIRST USED ON OPTION/MODEL | QTY. | DESCRIPTION | PART NO. | ITEM NO. |
|---|---|---|---|---|
| 11/45 | | PARTS LIST | | |

UNLESS OTHERWISE SPECIFIED DIMENSION IN INCHES. TOLERANCES

| DECIMALS | ANGLES |
|---|---|
| XXX ± .005 | ±0° 30' |
| XX ± .02 | |
| X ± 1 | |

REMOVE BURRS AND BREAK SHARP CORNERS SURFACE QUALITY

MATERIAL

FINISH

| | | |
|---|---|---|
| DRN | | DATE 7-7-71 |
| CHK'D | | DATE 7-11-72 |
| ENG | | DATE 3-21-72 |
| PROJ. ENG | | DATE 3-21-72 |
| PROD. | | DATE |

digital EQUIPMENT CORPORATION MAYNARD MASSACHUSETTS

TITLE ROM E

ROM CONTROL (RACJ)

NEXT HIGHER ASSY. D-DD-KB11 Ø

SCALE

SHEET 9 OF 15

| SIZE | CODE | NUMBER | REV. |
|---|---|---|---|
| D | CS | M8103-2-1 | H |

DIST.

| REVISIONS | CHANGE NO | CHK | REV. |
|---|---|---|---|
| | | | |

DEC FORM NO DRD 102-B

SIZE D CODE CS NUMBER M8103-Ø-1 REV H

This drawing and specifications, herein, are the property of Digital Equipment Corporation and shall not be reproduced or copied or used in whole or in part as the basis for the manufacture or sale of items without written permission.



RACK +3V H

74S04 E57

RACD UBEF Ø3 H

UBCE RIP+FP SYNC L (DH2)

74S74-45 E68

RACK SYNC BRC1Ø (1) H

TIGC TIB L (DR1)

74S11 E66

74S04 E52

TIGC TIB H (BJ1)

74S153 E49

GNDØ9
IRCD DM357 H (CM2)
IRCF Z2 (1) H (CL2)
GRAJ SC=Ø L (CK2)
GRAJ DIV SUB L (BV2)
GRAB OBD (Ø) H (CJ2)
DAPA BRI4 L (CH2)
GNDØ9 (CBI)
(CC1)
BE (Ø:7) BIT 5

RACD UBEFA Ø1 L
RACD UBEFA ØØ L

74S64 E51

RACK BRCAB Ø5 L

RACD UBEF Ø3 L

74S153 E59

RACK SYNC BRC1Ø (1) H
GRAV SC=Ø L (BV2)
TMCA CONF (1) H (CE2)
TMCB PF(Ø)*(SF+TF) H (CD2)
GNDØ9 (CF1)
IRCB FJ CLASS L (CE1)
GRAD DRØØ H (CD1)
BE (10:17) BIT 5

RACD UBEFB Ø1 L
RACD UBEFB ØØ L
RACD UBEF Ø2 L

74S04 E52

RACK FP REQ H

74S10 EG0

RACD UBEF Ø3 L

74S153 E69

GRAD DRØØ H (CD1)
TMCB BRQ TRUE L (AK1)
TMCB PF(Ø)*(SF+-TF) H (CR1)
GNDØ9 (CU1)
IRCC O CLASS L (CS1)
GRAH SR15 H (CV2)
BE (10:17) BIT 4

RACK SYNC BRC1Ø (1) H
FRMF FP REQ INR H (CT2)

74S11 E55

74S153 EG3

GNDØ9
GRAE SR EQ ONE L (CR2)
UBCC (PWRF+INTR) L (CP2)
GRAV SCØ5 L (CM1)
IRCH N (1) H (BH2)
GRAJ DIV QUIT L (DE2)
SSRA PS RESTORE (1) H (DD2)
TMCB BRQ *-(T+CONF) L (CU2)
BE (Ø:7) BIT 4

RACD UBEFA Ø1 L
RACD UBEFA ØØ L

UBCF CNSL Ø7 (1) H (BS2)

74S10 E57

RACK BRCAB Ø7 L

RACK BEF (3:2) 3 H

UBCF CNSL ACT (1) H (BU2)

74S04 E52

74S20 E53

RACK BRCAB Ø6 L

UBCH CNSL Ø2 H (DJ2)

74S10 E67

RACK BRCAB Ø2 L

UBCH CNSL Ø1 H (DE1)

RACK BRCAB Ø1 L

UBCH CNSL ØØ H (CN1)

74S11 E67

RACK BRCAB ØØ L

74S11 E66

74S11 E69

RACK BEF (1:Ø) Ø H

74S64 E65

RACK BRCAB Ø4 L

RACK +3V H

74S11 E66

RACK BEF (3:2) 3 H

74S11 E69

RACK BEF (1:Ø) 1 H

74S04 E72

+5V
R129 330
R130 680
FRMU FP REQ L (CP1)
74S04 E56 (1ØLF2)
RACK FP REQ H

RACD UBEF Ø3 L

74S04 E72

74S153

| | S1 | SØ | OUTPUT |
|---|---|---|---|
| STB=L | L | L | A→F |
| | L | H | B→F |
| | H | L | C→F |
| | H | H | D→F |
| STB=H | X | X | F=L |

BRANCH CONDITIONS (ROM ADDRESS MODIFICATION) SLOT 9

| FIRST USED ON OPTION/MODEL | QTY. | DESCRIPTION | PART NO. | ITEM NO. |
|---|---|---|---|---|
| 11/45 | | PARTS LIST | | |

UNLESS OTHERWISE SPECIFIED DIMENSION IN INCHES. TOLERANCES
DECIMALS: .XXX = .005, .XX = .02, .X = .1 | ANGLES: ±0° 30'
REMOVE BURRS AND BREAK SHARP CORNERS SURFACE QUALITY ✓
MATERIAL
FINISH

DRN. K. Burns DATE 7-8-71
CHK'D. DATE 7/21/72
ENG. DATE 8-21-72
PROJ. ENG. C. S. Kraus DATE 8-21-72
PROD. DATE

digital EQUIPMENT CORPORATION MAYNARD MASSACHUSETTS

TITLE: ROM & ROM CONTROL

NEXT HIGHER ASSY. B-DD-KB11-Ø
SCALE
SHEET 10 OF 15

SIZE D | CODE CS | NUMBER M8103-Ø-1 | REV. H
DIST.

REVISIONS | REV. | CHANGE NO. | CHK

DEC FORM NO DRD 102-B

This drawing and specifications, herein, are the property of Digital Equipment Corporation and shall not be reproduced or copied or used in whole or in part as the basis for the manufacture or sale of items without written permission.



RACL +3V H

IRCB BØ RABØ3 L (DL2)
IRCC CØ RABØ3 L (DP2)
74S64 E74 8 → RACL RADRØ3 H
RACD UADRØ3 L
RACE AØ RABØ3 L
RACF A2 RABØ3 L
RACE AØ RABØ5 L

RACD UAFEN L → 74S04 E84 (5→6)

IRCB BØ RABØ2 L (DL1)
IRCC CØ RABØ2 L (DM1)
74S64 E75 8 → RACL RADRØ2 H
RACD UADRØ2 L
RACK BRCABØ2 L
RACE AØ RABØ2 L
RACF A1 RABØ2 L
RACH A2 RABØ2 L

RACD UBFEN L
(CE1)
IRCB FJCLASS L
RACK BEF (1:Ø) 1 H
RACK BEF (3:2) 3 H
QRAB OBD (1) H
RACD UBEFØ3 L (DF2)
74S64 E71 8
RACD UBEFØ2 L → 74S04 E72 (1→2)

IRCB BØ RABØ1 L (DA1)
IRCC CØ RABØ1 L (DN1)
74S64 E76 8 → RACL RADRØ1 H
RACD UADRØ1 L
RACK BRCABØ1 L
RACE AØ RABØ1 L
RACF A1 RABØ1 L
RACH A2 RABØ1 L

RACD UCFEN L
(DD1)
IRCC SM357 H
RACK BEF (1:Ø) Ø H
RACK BEF (3:2) 3 H
74S64 E7Ø 8

IRCC CØ RABØØ L (DP1)
RACD UADRØØ L
RACK BRCABØØ L
IRCB BØ RABØØ L (DK1)
IRCB B1 RABØØ L (DM2)
74S64 E77 8 → RACL RADRØØ H
RACE AØ RABØØ L
RACF A1 RABØØ L
RACH A2 RABØØ L

IRCC DSTMØ L (D2E)
74S64 E83 8 → RACL RADRØ7 H
RACE AØ RABØ4 L
RACH AØ RABØ7 L
RACK BRCABØ7 L
RACD UADRØ7 L

IRCC DSTMØ H (DS1)
74S64 E82 8 → RACL RADRØ6 H
RACD UADRØ6 L
RACK BRCABØ6 L
RACE AØ RABØ4 L
RACH A2 RABØØ L

IRCB BØ RABØ4 L (DF1)
74S64 E81 8 → RACL RADRØ5 H
RACD UADRØ5 L
RACK BRCABØ5 L
RACE AØ RABØ5 L
RACF A1 RABØ5 L
RACF A2 RABØ5 L

RACD UADRØ4 L
RACK BRCABØ4 L
RACE AØ RABØ4 L
RACH A1 RABØ4 L
IRCB BØ RABØ4 L (DF1)
IRCB BØ RABØ3 L (DL2)
74S64 E80 8 → RACL RADRØ4 H

74S04 E72 (3→4) → RACL +3V H

DISABLE BFORK: $\overline{UBFEN}$ + BE15 * $\overline{FJCLASS}$ + BEØ5 * OBD
DISABLE CFORK: $\overline{UCFEN}$ + BE14 * SM357

ROM ADDRESS SELECTION SLOT 9

| FIRST USED ON OPTION/MODEL | QTY. | DESCRIPTION | PART NO. | ITEM NO. |
|---|---|---|---|---|
| 11/45 | | PARTS LIST | | |

| | | | |
|---|---|---|---|
| UNLESS OTHERWISE SPECIFIED DIMENSION IN INCHES. TOLERANCES | DRN. | DATE 7-8-71 | digital EQUIPMENT CORPORATION MAYNARD, MASSACHUSETTS |
| DECIMALS .XXX ± .005 .XX ± .02 .X ± .1 / ANGLES ±0° 30' | CHK | DATE | TITLE ROM & ROM CONTROL (RACL) |
| | ENG | DATE 3-21-72 | |
| REMOVE BURRS AND BREAK SHARP CORNERS SURFACE QUALITY ✓ | PROJ. ENG. | DATE 3-21-72 | |
| | PROD. | DATE | |
| MATERIAL — | NEXT HIGHER ASSY. B-DD-KB11-Ø | SIZE D / CODE CS / NUMBER M8103-Ø-1 | REV. H |
| FINISH — | SCALE — | | |
| | SHEET 11 OF 15 | DIST. | |

REVISIONS | REV | CHANGE NO | CHK

DEC FORM NO DRD 102-B

M8103-Ø-1 H

| FLOWS | STATE | ADR | BRK | BRX | SRX | DRX | SRK | DRK | CCL | PCA | PCB | SHF | IRK | PWE | PAD | BSD | BAX | IBS | SHC | BCT | MSC | BSC | AMX | BMX | KMX | ALU | FEN | BEN | UAD |
|---|---|---|---|---|---|---|---|---|---|---|---|---|---|---|---|---|---|---|---|---|---|---|---|---|---|---|---|---|---|
| 12 | RSD,00 | 000 | 1 | 1 | 0 | 0 | 0 | 3 | 0 | 0 | 0 | 2 | 0 | 0 | 0 | 0 | 1 | 3 | 0 | 7 | 0 | 0 | 0 | 1 | 1 | 1 | 0 | 00 | 345 |
| 5 | D12,00 | 001 | 1 | 0 | 0 | 0 | 0 | 0 | 0 | 0 | 0 | 2 | 0 | 0 | 5 | 0 | 0 | 0 | 0 | 0 | 7 | 6 | 2 | 0 | 0 | 2 | 0 | 15 | 115 |
| 5 | D12,01 | 002 | 1 | 0 | 0 | 0 | 0 | 0 | 0 | 0 | 0 | 2 | 0 | 0 | 5 | 0 | 0 | 0 | 0 | 0 | 7 | 6 | 2 | 0 | 0 | 2 | 0 | 15 | 115 |
| 5 | D30,00 | 003 | 0 | 0 | 0 | 0 | 0 | 0 | 0 | 0 | 0 | 2 | 0 | 0 | 5 | 0 | 0 | 0 | 0 | 0 | 7 | 0 | 2 | 0 | 0 | 2 | 0 | 00 | 221 |
| 6 | D45,00 | 004 | 0 | 0 | 0 | 0 | 0 | 3 | 0 | 1 | 3 | 2 | 0 | 2 | 5 | 0 | 1 | 0 | 0 | 7 | 0 | 0 | 0 | 0 | 3 | 6 | 0 | 01 | 122 |
| 6 | D45,01 | 005 | 0 | 0 | 0 | 0 | 0 | 3 | 0 | 1 | 3 | 2 | 0 | 2 | 5 | 0 | 1 | 0 | 0 | 7 | 0 | 0 | 0 | 0 | 3 | 6 | 0 | 01 | 122 |
| 6 | D67,00 | 006 | 1 | 1 | 0 | 2 | 0 | 3 | 0 | 1 | 0 | 2 | 0 | 0 | 5 | 2 | 1 | 0 | 0 | 0 | 0 | 0 | 1 | 0 | 1 | 3 | 0 | 00 | 251 |
| 6 | D67,01 | 007 | 1 | 1 | 0 | 2 | 0 | 3 | 0 | 1 | 0 | 2 | 0 | 0 | 5 | 2 | 1 | 0 | 0 | 0 | 0 | 0 | 1 | 0 | 1 | 3 | 0 | 00 | 251 |
| 3 | HLT,00 | 010 | 1 | 1 | 0 | 1 | 1 | 3 | 0 | 0 | 0 | 1 | 0 | 0 | 6 | 0 | 1 | 3 | 0 | 7 | 0 | 0 | 0 | 0 | 0 | 0 | 0 | 00 | 327 |
| 3 | WAT,00 | 011 | 0 | 0 | 0 | 1 | 0 | 3 | 0 | 0 | 0 | 2 | 0 | 0 | 6 | 0 | 1 | 0 | 0 | 7 | 0 | 0 | 0 | 0 | 0 | 2 | 0 | 12 | 244 |
| 2 | RTI,00 | 012 | 0 | 0 | 1 | 0 | 1 | 0 | 0 | 0 | 0 | 2 | 0 | 0 | 7 | 0 | 1 | 0 | 0 | 7 | 0 | 0 | 3 | 0 | 0 | 2 | 0 | 00 | 156 |
| 12 | TRP,01 | 013 | 1 | 1 | 0 | 0 | 0 | 3 | 0 | 0 | 0 | 2 | 0 | 0 | 0 | 0 | 1 | 3 | 0 | 7 | 0 | 0 | 0 | 1 | 1 | 1 | 0 | 00 | 354 |
| 12 | TRP,02 | 014 | 1 | 1 | 0 | 0 | 0 | 3 | 0 | 0 | 0 | 2 | 0 | 0 | 0 | 0 | 1 | 3 | 0 | 7 | 0 | 0 | 0 | 1 | 1 | 1 | 0 | 00 | 354 |
| 3 | RES,00 | 015 | 0 | 0 | 0 | 1 | 0 | 3 | 0 | 0 | 0 | 2 | 0 | 0 | 6 | 0 | 1 | 0 | 0 | 7 | 0 | 0 | 3 | 0 | 0 | 2 | 0 | 00 | 255 |
| 2 | RTI,01 | 016 | 0 | 0 | 1 | 0 | 1 | 0 | 0 | 0 | 0 | 2 | 0 | 0 | 7 | 0 | 1 | 0 | 0 | 7 | 0 | 0 | 3 | 0 | 0 | 2 | 0 | 00 | 156 |
| 12 | RSD,01 | 017 | 1 | 1 | 0 | 0 | 0 | 3 | 0 | 0 | 0 | 2 | 0 | 0 | 0 | 0 | 1 | 3 | 0 | 7 | 0 | 0 | 0 | 1 | 1 | 1 | 0 | 00 | 345 |
| 3 | EXC,80 | 020 | 1 | 1 | 0 | 0 | 0 | 0 | 1 | 0 | 1 | 2 | 1 | 1 | 5 | 3 | 1 | 0 | 0 | 0 | 6 | 0 | 0 | 2 | 0 | 7 | 0 | 00 | 343 |
| 1 | S13,00 | 021 | 0 | 0 | 0 | 0 | 0 | 0 | 0 | 1 | 2 | 2 | 0 | 2 | 0 | 0 | 2 | 0 | 0 | 0 | 7 | 1 | 2 | 0 | 2 | 3 | 0 | 00 | 027 |
| 1 | S13,01 | 022 | 0 | 0 | 0 | 0 | 0 | 0 | 0 | 1 | 2 | 2 | 0 | 2 | 0 | 0 | 2 | 0 | 0 | 0 | 7 | 1 | 2 | 0 | 2 | 3 | 0 | 00 | 027 |
| 1 | S45,10 | 023 | 0 | 0 | 0 | 0 | 0 | 0 | 0 | 0 | 0 | 1 | 0 | 0 | 0 | 0 | 2 | 0 | 0 | 0 | 7 | 1 | 0 | 0 | 0 | 0 | 0 | 00 | 027 |
| 1 | S45,00 | 024 | 0 | 0 | 0 | 0 | 1 | 0 | 0 | 1 | 2 | 2 | 0 | 2 | 0 | 0 | 1 | 0 | 0 | 7 | 0 | 0 | 2 | 0 | 2 | 6 | 0 | 00 | 023 |
| 13 | SVC,60 | 025 | 0 | 0 | 0 | 0 | 0 | 0 | 0 | 0 | 0 | 2 | 0 | 2 | 7 | 0 | 0 | 0 | 0 | 0 | 7 | 5 | 0 | 0 | 1 | 6 | 0 | 00 | 041 |
| 2 | S67,00 | 026 | 1 | 1 | 2 | 2 | 1 | 3 | 0 | 0 | 0 | 2 | 0 | 0 | 1 | 2 | 1 | 0 | 0 | 0 | 0 | 0 | 1 | 0 | 1 | 3 | 0 | 00 | 054 |
| 1 | S13,10 | 027 | 1 | 1 | 0 | 2 | 0 | 3 | 0 | 0 | 0 | 1 | 0 | 0 | 5 | 3 | 2 | 0 | 0 | 0 | 6 | 1 | 0 | 0 | 0 | 0 | 4 | 14 | 317 |
| 3 | EXC,90 | 030 | 0 | 0 | 0 | 0 | 0 | 0 | 1 | 1 | 3 | 2 | 0 | 1 | 5 | 0 | 1 | 0 | 0 | 7 | 6 | 0 | 0 | 2 | 0 | 7 | 0 | 00 | 217 |
| 11 | EXC,00 | 031 | 1 | 0 | 0 | 0 | 0 | 0 | 1 | 0 | 0 | 2 | 0 | 0 | 6 | 0 | 0 | 0 | 0 | 0 | 7 | 6 | 3 | 2 | 0 | 7 | 0 | 00 | 132 |
| 11 | TST,00 | 032 | 0 | 0 | 0 | 0 | 0 | 0 | 1 | 0 | 0 | 2 | 0 | 0 | 0 | 0 | 0 | 0 | 0 | 0 | 6 | 6 | 3 | 2 | 0 | 7 | 0 | 00 | 217 |
| 11 | TST,10 | 033 | 0 | 0 | 0 | 0 | 0 | 0 | 1 | 0 | 0 | 2 | 0 | 0 | 5 | 0 | 1 | 0 | 0 | 0 | 7 | 0 | 3 | 2 | 0 | 7 | 0 | 12 | 240 |
| 11 | JSR,00 | 034 | 0 | 0 | 2 | 0 | 1 | 0 | 0 | 1 | 0 | 1 | 0 | 0 | 0 | 0 | 0 | 0 | 0 | 7 | 0 | 0 | 0 | 0 | 0 | 2 | 0 | 00 | 201 |
| 11 | JMP,00 | 035 | 0 | 0 | 0 | 0 | 0 | 0 | 0 | 1 | 1 | 1 | 0 | 0 | 0 | 0 | 0 | 0 | 0 | 7 | 6 | 0 | 0 | 0 | 0 | 2 | 0 | 00 | 217 |
| 7 | FOP,40 | 036 | 1 | 0 | 0 | 0 | 0 | 0 | 0 | 0 | 0 | 2 | 0 | 0 | 0 | 0 | 0 | 0 | 0 | 7 | 1 | 0 | 0 | 0 | 0 | 2 | 0 | 00 | 225 |
| 13 | SVC,50 | 037 | 0 | 0 | 0 | 0 | 0 | 3 | 0 | 0 | 0 | 2 | 0 | 2 | 7 | 0 | 0 | 0 | 0 | 0 | 0 | 0 | 0 | 0 | 1 | 6 | 0 | 00 | 025 |

| FLOWS | STATE | ADR | BRK | BRX | SRX | DRX | SRK | DRK | CCL | PCA | PCB | SHF | IRK | PWE | PAD | BSD | BAX | IBS | SHC | BCT | MSC | BSC | AMX | BMX | KMX | ALU | FEN | BEN | UAD |
|---|---|---|---|---|---|---|---|---|---|---|---|---|---|---|---|---|---|---|---|---|---|---|---|---|---|---|---|---|---|
| 2 | RTS,00 | 040 | 0 | 0 | 1 | 0 | 1 | 0 | 0 | 1 | 1 | 2 | 0 | 0 | 7 | 0 | 1 | 0 | 0 | 7 | 0 | 0 | 0 | 0 | 0 | 2 | 0 | 00 | 223 |
| 13 | SVC,70 | 041 | 1 | 0 | 0 | 1 | 0 | 3 | 0 | 0 | 0 | 2 | 0 | 0 | 7 | 3 | 0 | 0 | 0 | 0 | 0 | 5 | 2 | 0 | 0 | 2 | 0 | 00 | 222 |
| 12 | RSD,02 | 042 | 1 | 1 | 0 | 0 | 0 | 3 | 0 | 0 | 0 | 2 | 0 | 0 | 0 | 0 | 1 | 3 | 0 | 7 | 0 | 0 | 0 | 1 | 1 | 1 | 0 | 00 | 345 |
| 3 | SPL,00 | 043 | 0 | 0 | 0 | 0 | 0 | 0 | 0 | 0 | 0 | 2 | 0 | 0 | 0 | 0 | 1 | 0 | 0 | 7 | 4 | 0 | 3 | 0 | 0 | 2 | 0 | 00 | 361 |
| 3 | CCP,00 | 044 | 0 | 0 | 0 | 0 | 0 | 0 | 2 | 0 | 0 | 2 | 0 | 0 | 0 | 0 | 1 | 0 | 0 | 7 | 6 | 0 | 3 | 0 | 0 | 2 | 0 | 00 | 217 |
| 1 | MTP,00 | 045 | 0 | 0 | 0 | 0 | 0 | 0 | 0 | 0 | 0 | 2 | 0 | 2 | 7 | 0 | 1 | 0 | 0 | 7 | 0 | 0 | 2 | 0 | 1 | 3 | 0 | 00 | 151 |
| 11 | MFP,80 | 046 | 0 | 0 | 0 | 2 | 0 | 3 | 0 | 0 | 0 | 1 | 0 | 1 | 5 | 0 | 1 | 0 | 0 | 7 | 0 | 0 | 0 | 0 | 0 | 0 | 0 | 00 | 304 |
| 2 | MRK,00 | 047 | 0 | 0 | 1 | 0 | 1 | 3 | 0 | 0 | 0 | 2 | 0 | 0 | 2 | 0 | 1 | 0 | 0 | 7 | 0 | 0 | 1 | 1 | 2 | 3 | 0 | 00 | 252 |
| 3 | MUL,80 | 050 | 0 | 0 | 0 | 0 | 0 | 0 | 0 | 0 | 0 | 2 | 0 | 0 | 0 | 0 | 1 | 0 | 3 | 7 | 0 | 0 | 0 | 0 | 0 | 2 | 0 | 00 | 102 |
| 3 | DVS,00 | 051 | 1 | 0 | 0 | 0 | 0 | 0 | 0 | 0 | 0 | 2 | 0 | 0 | 0 | 0 | 1 | 0 | 0 | 7 | 0 | 0 | 0 | 0 | 0 | 2 | 0 | 00 | 061 |
| 7 | ASH,10 | 052 | 0 | 0 | 0 | 0 | 0 | 0 | 0 | 0 | 0 | 2 | 0 | 0 | 0 | 0 | 1 | 0 | 2 | 7 | 0 | 0 | 2 | 0 | 0 | 2 | 0 | 00 | 305 |
| 7 | ASC,10 | 053 | 0 | 0 | 0 | 1 | 0 | 3 | 0 | 0 | 0 | 2 | 0 | 0 | 4 | 0 | 1 | 0 | 2 | 7 | 0 | 0 | 2 | 0 | 0 | 2 | 0 | 00 | 306 |
| 2 | S67,10 | 054 | 0 | 0 | 0 | 0 | 1 | 0 | 0 | 0 | 1 | 2 | 0 | 0 | 0 | 0 | 1 | 0 | 0 | 0 | 0 | 0 | 2 | 3 | 0 | 3 | 0 | 00 | 141 |
| 9 | DVN,40 | 055 | 0 | 0 | 0 | 0 | 0 | 3 | 4 | 0 | 0 | 2 | 0 | 2 | 0 | 0 | 0 | 0 | 0 | 0 | 0 | 0 | 0 | 2 | 0 | 6 | 0 | 00 | 056 |
| 9 | DVN,50 | 056 | 0 | 0 | 0 | 0 | 1 | 0 | 0 | 0 | 0 | 2 | 0 | 0 | 0 | 0 | 0 | 0 | 0 | 0 | 0 | 0 | 3 | 0 | 0 | 2 | 0 | 00 | 306 |
| 2 | SOB,00 | 057 | 1 | 0 | 0 | 0 | 0 | 0 | 0 | 1 | 1 | 1 | 0 | 0 | 0 | 0 | 1 | 0 | 0 | 7 | 6 | 0 | 1 | 1 | 2 | 6 | 0 | 01 | 242 |
| 8 | MUL,00 | 060 | 0 | 0 | 0 | 0 | 0 | 3 | 0 | 0 | 0 | 2 | 0 | 0 | 0 | 0 | 0 | 0 | 3 | 0 | 0 | 6 | 3 | 0 | 0 | 2 | 0 | 00 | 102 |
| 9 | DIV,00 | 061 | 0 | 0 | 0 | 1 | 1 | 3 | 4 | 0 | 0 | 2 | 0 | 0 | 0 | 0 | 0 | 0 | 0 | 0 | 0 | 6 | 3 | 0 | 0 | 2 | 0 | 00 | 254 |
| 7 | ASH,00 | 062 | 0 | 0 | 0 | 0 | 0 | 3 | 0 | 0 | 0 | 2 | 0 | 0 | 0 | 0 | 0 | 0 | 0 | 0 | 0 | 6 | 3 | 0 | 0 | 2 | 0 | 00 | 052 |
| 7 | ASC,00 | 063 | 0 | 0 | 0 | 0 | 0 | 3 | 0 | 0 | 0 | 2 | 0 | 0 | 0 | 0 | 0 | 0 | 0 | 0 | 0 | 6 | 3 | 0 | 0 | 2 | 0 | 00 | 053 |
| 11 | SHR,00 | 064 | 1 | 0 | 0 | 0 | 0 | 0 | 1 | 0 | 0 | 2 | 0 | 0 | 0 | 0 | 0 | 0 | 0 | 0 | 0 | 6 | 3 | 0 | 0 | 7 | 0 | 00 | 123 |
| 13 | SVC,10 | 065 | 0 | 0 | 0 | 0 | 1 | 0 | 0 | 0 | 1 | 1 | 0 | 0 | 6 | 0 | 0 | 0 | 0 | 0 | 7 | 2 | 0 | 0 | 0 | 0 | 0 | 00 | 357 |
| 11 | MFP,00 | 066 | 0 | 0 | 1 | 0 | 1 | 0 | 1 | 0 | 0 | 2 | 0 | 0 | 7 | 0 | 0 | 0 | 0 | 0 | 0 | 6 | 3 | 0 | 0 | 2 | 0 | 00 | 250 |
| 11 | NEG,00 | 067 | 1 | 0 | 0 | 0 | 0 | 0 | 0 | 0 | 0 | 2 | 0 | 0 | 0 | 0 | 0 | 0 | 0 | 0 | 0 | 6 | 3 | 0 | 0 | 7 | 0 | 00 | 271 |
| 14 | EXM,10 | 070 | 0 | 0 | 0 | 0 | 0 | 0 | 0 | 0 | 0 | 0 | 0 | 0 | 6 | 0 | 2 | 0 | 0 | 0 | 7 | 0 | 0 | 0 | 0 | 0 | 0 | 00 | 153 |
| 14 | EXM,00 | 071 | 0 | 0 | 0 | 0 | 1 | 0 | 0 | 0 | 0 | 2 | 0 | 0 | 0 | 0 | 2 | 0 | 0 | 0 | 0 | 0 | 2 | 0 | 1 | 3 | 0 | 00 | 070 |
| 14 | RAD,00 | 072 | 0 | 0 | 0 | 0 | 0 | 0 | 0 | 0 | 0 | 2 | 1 | 0 | 0 | 0 | 2 | 0 | 0 | 0 | 0 | 0 | 2 | 0 | 0 | 2 | 0 | 00 | 314 |
| 14 | DEP,10 | 073 | 0 | 0 | 0 | 0 | 0 | 0 | 0 | 0 | 0 | 2 | 0 | 0 | 6 | 0 | 2 | 0 | 0 | 0 | 7 | 5 | 3 | 0 | 0 | 2 | 0 | 00 | 303 |
| 14 | DEP,00 | 074 | 0 | 0 | 0 | 0 | 1 | 0 | 0 | 0 | 0 | 2 | 0 | 0 | 0 | 0 | 2 | 0 | 0 | 0 | 0 | 0 | 2 | 0 | 1 | 3 | 0 | 00 | 073 |
| 14 | RDP,00 | 075 | 0 | 0 | 0 | 0 | 0 | 0 | 0 | 0 | 0 | 2 | 1 | 0 | 0 | 0 | 2 | 0 | 0 | 0 | 0 | 0 | 2 | 0 | 0 | 2 | 0 | 00 | 307 |
| 14 | KST,00 | 076 | 0 | 0 | 0 | 0 | 0 | 0 | 0 | 0 | 1 | 2 | 0 | 0 | 0 | 0 | 2 | 0 | 0 | 6 | 0 | 0 | 0 | 0 | 0 | 2 | 0 | 00 | 015 |
| 14 | CON,10 | 077 | 0 | 0 | 0 | 0 | 0 | 0 | 0 | 0 | 0 | 0 | 0 | 0 | 0 | 0 | 1 | 0 | 0 | 0 | 0 | 0 | 0 | 0 | 0 | 2 | 0 | 00 | 130 |

| | | | | |
|---|---|---|---|---|
| DRN [signature] | DATE 3/23/72 | TITLE ROM & ROM CONTROL (ADR 000 -077) | | |
| CHK'D [signature] | DATE 3/27/72 | | | |
| ENG Steve Jenkins | DATE 3-28-72 | | | |
| PROJ. ENG. E Eriksen | DATE 3-28-72 | | | |
| PROD. [signature] | DATE 3-30-72 | SIZE K | CODE CS | NUMBER M8103-0-1 REV. H |
| SHEET 12 OF 15 | | | | |

| FLOWS | STATE | ADR | BRK | BRX | SRX | DRX | SRK | DRK | CCL | PCA | PCB | SHF | IRK | PWE | PAD | BSD | BAX | IBS | SHC | BCT | MSC | BSC | AMX | BMX | KMX | ALU | FEN | BEN | UAD |
|---|---|---|---|---|---|---|---|---|---|---|---|---|---|---|---|---|---|---|---|---|---|---|---|---|---|---|---|---|---|
| 12 | PUP,00 | 100 | 0 | 0 | 0 | 0 | 0 | 3 | 0 | 0 | 0 | 2 | 0 | 0 | 0 | 0 | 1 | 0 | 0 | 6 | 0 | 0 | 0 | 1 | 0 | 1 | 0 | 00 | 347 |
| 2 | FOP,00 | 101 | 0 | 0 | 0 | 0 | 1 | 0 | 0 | 1 | 1 | 2 | 0 | 0 | 0 | 0 | 1 | 0 | 0 | 7 | 1 | 0 | 1 | 0 | 1 | 6 | 0 | 00 | 133 |
| 8 | MUL,10 | 102 | 1 | 0 | 0 | 0 | 0 | 1 | 0 | 0 | 0 | 2 | 0 | 0 | 0 | 0 | 0 | 0 | 1 | 0 | 0 | 0 | 3 | 3 | 0 | 6 | 0 | 11 | 246 |
| 9 | DVP,10 | 103 | 0 | 0 | 0 | 1 | 0 | 3 | 0 | 0 | 0 | 2 | 0 | 0 | 4 | 0 | 2 | 0 | 3 | 0 | 0 | 0 | 0 | 0 | 0 | 2 | 0 | 00 | 147 |
| 9 | DVN,10 | 104 | 0 | 0 | 0 | 0 | 0 | 0 | 0 | 0 | 0 | 2 | 0 | 2 | 4 | 0 | 0 | 0 | 0 | 0 | 0 | 0 | 0 | 2 | 0 | 6 | 0 | 00 | 105 |
| 9 | DVN,20 | 105 | 0 | 0 | 0 | 0 | 0 | 2 | 0 | 0 | 0 | 2 | 0 | 0 | 0 | 0 | 0 | 0 | 0 | 0 | 0 | 0 | 0 | 2 | 0 | 6 | 0 | 00 | 106 |
| 9 | DVN,30 | 106 | 0 | 0 | 1 | 0 | 1 | 3 | 0 | 0 | 0 | 2 | 0 | 0 | 0 | 0 | 0 | 0 | 0 | 0 | 0 | 0 | 0 | 0 | 0 | 6 | 0 | 00 | 055 |
| 9 | DVN,70 | 107 | 0 | 0 | 0 | 1 | 0 | 3 | 4 | 0 | 0 | 2 | 0 | 0 | 4 | 0 | 0 | 0 | 3 | 0 | 0 | 0 | 0 | 0 | 0 | 0 | 0 | 00 | 147 |
| 5 | D12,90 | 110 | 0 | 0 | 0 | 0 | 1 | 0 | 3 | 0 | 0 | 0 | 0 | 0 | 5 | 0 | 0 | 0 | 0 | 0 | 7 | 6 | 3 | 0 | 0 | 2 | 0 | 15 | 135 |
| 5 | D12,80 | 111 | 0 | 0 | 0 | 0 | 1 | 0 | 3 | 0 | 0 | 2 | 0 | 0 | 5 | 0 | 0 | 0 | 0 | 0 | 7 | 6 | 3 | 0 | 0 | 2 | 0 | 15 | 115 |
| 5 | D30,90 | 112 | 0 | 0 | 0 | 0 | 1 | 0 | 3 | 0 | 0 | 0 | 0 | 0 | 5 | 0 | 0 | 0 | 0 | 0 | 7 | 0 | 3 | 0 | 0 | 2 | 0 | 00 | 221 |
| 5 | D30,80 | 113 | 0 | 0 | 0 | 0 | 1 | 0 | 3 | 0 | 0 | 2 | 0 | 0 | 5 | 0 | 0 | 0 | 0 | 0 | 7 | 0 | 3 | 0 | 0 | 2 | 0 | 00 | 221 |
| 6 | D45,90 | 114 | 0 | 0 | 0 | 0 | 0 | 3 | 3 | 1 | 3 | 2 | 0 | 2 | 5 | 0 | 0 | 0 | 0 | 0 | 6 | 0 | 0 | 0 | 3 | 6 | 0 | 01 | 131 |
| 6 | D45,80 | 115 | 0 | 0 | 0 | 0 | 0 | 3 | 3 | 1 | 3 | 2 | 0 | 2 | 5 | 0 | 0 | 0 | 0 | 0 | 0 | 0 | 0 | 0 | 3 | 6 | 0 | 01 | 121 |
| 6 | D67,90 | 116 | 0 | 0 | 0 | 0 | 1 | 0 | 3 | 0 | 0 | 0 | 0 | 0 | 5 | 0 | 1 | 0 | 0 | 0 | 7 | 0 | 3 | 0 | 0 | 2 | 0 | 00 | 006 |
| 6 | D67,80 | 117 | 0 | 0 | 0 | 0 | 1 | 0 | 3 | 0 | 0 | 2 | 0 | 0 | 5 | 0 | 1 | 0 | 0 | 0 | 7 | 0 | 3 | 0 | 0 | 2 | 0 | 00 | 006 |
| 12 | BRK,20 | 120 | 1 | 1 | 0 | 0 | 0 | 0 | 0 | 0 | 0 | 2 | 0 | 0 | 0 | 0 | 1 | 3 | 0 | 6 | 0 | 0 | 0 | 0 | 0 | 2 | 0 | 02 | 152 |
| 6 | D40,20 | 121 | 0 | 0 | 0 | 0 | 1 | 0 | 0 | 0 | 0 | 2 | 0 | 0 | 5 | 0 | 0 | 0 | 0 | 0 | 7 | 6 | 3 | 0 | 0 | 2 | 2 | 15 | 157 |
| 6 | D10,30 | 122 | 1 | 0 | 0 | 0 | 0 | 0 | 0 | 0 | 0 | 2 | 0 | 0 | 5 | 0 | 0 | 0 | 0 | 0 | 7 | 6 | 2 | 0 | 0 | 2 | 2 | 15 | 157 |
| 11 | SHR,10 | 123 | 1 | 0 | 0 | 0 | 0 | 0 | 0 | 0 | 0 | 0 | 0 | 0 | 5 | 0 | 0 | 0 | 0 | 0 | 7 | 7 | 3 | 0 | 0 | 2 | 0 | 00 | 132 |
| 12 | TRP,02 | 124 | 1 | 1 | 0 | 0 | 0 | 3 | 0 | 0 | 0 | 2 | 0 | 0 | 0 | 0 | 1 | 3 | 0 | 7 | 0 | 0 | 0 | 1 | 1 | 1 | 0 | 00 | 354 |
| 10 | DVC,00 | 125 | 0 | 0 | 0 | 0 | 0 | 0 | 0 | 0 | 0 | 2 | 0 | 2 | 4 | 0 | 0 | 0 | 0 | 0 | 0 | 0 | 3 | 0 | 0 | 2 | 0 | 16 | 216 |
| 1 | FET,05 | 126 | 0 | 0 | 0 | 0 | 0 | 0 | 0 | 0 | 0 | 2 | 1 | 0 | 0 | 0 | 1 | 0 | 0 | 3 | 7 | 0 | 2 | 2 | 0 | 6 | 0 | 12 | 240 |
| 3 | WAT,30 | 127 | 0 | 0 | 0 | 0 | 0 | 0 | 0 | 0 | 0 | 2 | 0 | 0 | 0 | 0 | 1 | 0 | 0 | 0 | 0 | 0 | 3 | 0 | 0 | 2 | 0 | 02 | 253 |
| 12 | BRK,10 | 130 | 0 | 0 | 0 | 0 | 0 | 3 | 0 | 0 | 0 | 2 | 0 | 0 | 0 | 0 | 1 | 0 | 0 | 0 | 0 | 0 | 3 | 0 | 0 | 2 | 0 | 13 | 100 |
| 6 | D40,30 | 131 | 0 | 0 | 0 | 0 | 1 | 0 | 0 | 0 | 0 | 0 | 0 | 0 | 5 | 0 | 0 | 0 | 0 | 0 | 7 | 6 | 3 | 0 | 0 | 2 | 2 | 15 | 177 |
| 11 | EXC,10 | 132 | 0 | 0 | 0 | 0 | 0 | 0 | 0 | 0 | 0 | 2 | 0 | 0 | 0 | 3 | 0 | 0 | 0 | 0 | 6 | 7 | 3 | 0 | 0 | 2 | 0 | 00 | 217 |
| 2 | FOP,10 | 133 | 0 | 0 | 0 | 0 | 0 | 0 | 0 | 0 | 0 | 2 | 0 | 0 | 0 | 0 | 1 | 0 | 0 | 0 | 0 | 0 | 3 | 0 | 0 | 2 | 0 | 07 | 154 |
| 14 | EXM,30 | 134 | 0 | 0 | 0 | 0 | 0 | 3 | 0 | 0 | 0 | 2 | 0 | 0 | 0 | 0 | 2 | 0 | 0 | 0 | 0 | 0 | 3 | 0 | 0 | 2 | 0 | 00 | 230 |
| 5 | D12,70 | 135 | 0 | 0 | 0 | 0 | 0 | 0 | 0 | 1 | 3 | 2 | 0 | 2 | 5 | 0 | 0 | 0 | 0 | 7 | 6 | 0 | 0 | 0 | 3 | 3 | 2 | 00 | 137 |
| 7 | ASC,61 | 136 | 0 | 0 | 0 | 0 | 0 | 0 | 6 | 0 | 0 | 2 | 0 | 2 | 4 | 0 | 1 | 0 | 0 | 0 | 7 | 0 | 0 | 0 | 0 | 2 | 0 | 12 | 240 |
| 5 | D12,30 | 137 | 1 | 0 | 0 | 0 | 0 | 0 | 0 | 0 | 0 | 0 | 0 | 0 | 0 | 0 | 0 | 0 | 0 | 0 | 0 | 6 | 3 | 0 | 0 | 2 | 2 | 00 | 377 |

| FLOWS | STATE | ADR | BRK | BRX | SRX | DRX | SRK | DRK | CCL | PCA | PCB | SHF | IRK | PWE | PAD | BSD | BAX | IBS | SHC | BCT | MSC | BSC | AMX | BMX | KMX | ALU | FEN | BEN | UAD |
|---|---|---|---|---|---|---|---|---|---|---|---|---|---|---|---|---|---|---|---|---|---|---|---|---|---|---|---|---|---|
| 12 | BRK,80 | 140 | 1 | 1 | 0 | 0 | 0 | 3 | 0 | 0 | 0 | 2 | 0 | 0 | 0 | 0 | 1 | 3 | 0 | 0 | 0 | 0 | 0 | 1 | 1 | 1 | 0 | 00 | 152 |
| 2 | S67,20 | 141 | 0 | 0 | 0 | 0 | 0 | 0 | 0 | 0 | 0 | 1 | 0 | 0 | 6 | 0 | 2 | 0 | 0 | 0 | 7 | 1 | 0 | 0 | 0 | 0 | 0 | 00 | 142 |
| 2 | S67,30 | 142 | 1 | 1 | 0 | 0 | 0 | 0 | 0 | 0 | 0 | 1 | 0 | 0 | 0 | 3 | 2 | 0 | 0 | 0 | 6 | 1 | 0 | 0 | 0 | 0 | 4 | 14 | 317 |
| 2 | S13,30 | 143 | 0 | 0 | 0 | 0 | 0 | 0 | 0 | 0 | 0 | 1 | 0 | 0 | 6 | 0 | 2 | 0 | 0 | 0 | 7 | 3 | 0 | 0 | 0 | 0 | 0 | 00 | 146 |
| 10 | DVD,00 | 144 | 0 | 0 | 0 | 0 | 0 | 0 | 0 | 0 | 0 | 2 | 0 | 0 | 0 | 0 | 0 | 0 | 0 | 0 | 0 | 0 | 2 | 0 | 0 | 2 | 0 | 04 | 353 |
| 9 | DVE,20 | 145 | 0 | 0 | 0 | 0 | 0 | 0 | 7 | 0 | 0 | 2 | 0 | 0 | 0 | 0 | 2 | 0 | 0 | 0 | 6 | 0 | 0 | 0 | 0 | 2 | 0 | 00 | 164 |
| 2 | S13,40 | 146 | 1 | 1 | 0 | 0 | 0 | 0 | 0 | 0 | 0 | 1 | 0 | 0 | 0 | 3 | 2 | 0 | 0 | 0 | 6 | 3 | 0 | 0 | 0 | 0 | 4 | 00 | 377 |
| 9 | DIV,30 | 147 | 1 | 0 | 0 | 0 | 0 | 0 | 1 | 0 | 0 | 2 | 0 | 0 | 0 | 0 | 0 | 0 | 0 | 0 | 0 | 0 | 3 | 0 | 0 | 7 | 0 | 16 | 346 |
| 12 | FSV,10 | 150 | 1 | 1 | 0 | 0 | 0 | 3 | 0 | 0 | 0 | 2 | 0 | 0 | 0 | 3 | 0 | 0 | 0 | 0 | 1 | 4 | 0 | 0 | 1 | 3 | 0 | 00 | 225 |
| 1 | MTP,10 | 151 | 0 | 0 | 0 | 2 | 0 | 3 | 0 | 0 | 0 | 1 | 0 | 0 | 5 | 0 | 2 | 0 | 0 | 0 | 7 | 3 | 0 | 0 | 0 | 0 | 0 | 00 | 146 |
| 12 | BRK,30 | 152 | 0 | 0 | 0 | 0 | 0 | 0 | 0 | 1 | 0 | 2 | 0 | 0 | 6 | 0 | 0 | 0 | 0 | 6 | 7 | 2 | 3 | 0 | 0 | 2 | 0 | 00 | 355 |
| 14 | EXM,20 | 153 | 1 | 1 | 0 | 0 | 0 | 0 | 0 | 0 | 0 | 0 | 0 | 0 | 0 | 3 | 2 | 0 | 0 | 0 | 0 | 0 | 0 | 0 | 0 | 0 | 0 | 00 | 134 |
| 12 | BRK,00 | 154 | 1 | 1 | 0 | 0 | 1 | 0 | 0 | 0 | 0 | 2 | 0 | 0 | 0 | 1 | 1 | 0 | 0 | 0 | 0 | 0 | 1 | 0 | 0 | 2 | 0 | 12 | 130 |
| 5 | D12,60 | 155 | 0 | 0 | 0 | 0 | 0 | 0 | 0 | 1 | 3 | 2 | 0 | 2 | 5 | 3 | 0 | 0 | 0 | 0 | 6 | 6 | 0 | 0 | 3 | 3 | 0 | 00 | 312 |
| 2 | RTI,10 | 156 | 0 | 0 | 0 | 0 | 0 | 0 | 0 | 0 | 0 | 2 | 0 | 0 | 7 | 0 | 2 | 0 | 0 | 0 | 7 | 0 | 3 | 0 | 0 | 2 | 0 | 00 | 212 |
| 6 | D10,40 | 157 | 0 | 0 | 0 | 0 | 0 | 0 | 1 | 0 | 0 | 2 | 0 | 0 | 0 | 3 | 0 | 0 | 0 | 0 | 6 | 6 | 3 | 0 | 0 | 2 | 0 | 00 | 331 |
| 12 | SER,00 | 160 | 0 | 0 | 0 | 0 | 1 | 0 | 0 | 0 | 0 | 2 | 0 | 0 | 0 | 0 | 1 | 0 | 0 | 0 | 0 | 0 | 0 | 0 | 1 | 1 | 0 | 00 | 344 |
| 6 | D50,20 | 161 | 0 | 0 | 0 | 0 | 1 | 0 | 0 | 0 | 0 | 2 | 0 | 0 | 5 | 0 | 0 | 0 | 0 | 0 | 7 | 0 | 3 | 0 | 0 | 2 | 0 | 00 | 231 |
| 6 | D10,00 | 162 | 0 | 0 | 0 | 0 | 0 | 0 | 0 | 0 | 0 | 1 | 0 | 0 | 5 | 0 | 0 | 0 | 0 | 0 | 7 | 0 | 0 | 0 | 0 | 0 | 0 | 00 | 231 |
| 11 | NEG,20 | 163 | 0 | 0 | 0 | 0 | 0 | 0 | 0 | 0 | 0 | 2 | 0 | 0 | 5 | 0 | 0 | 0 | 0 | 0 | 7 | 7 | 3 | 0 | 0 | 2 | 0 | 00 | 132 |
| 1 | FET,04 | 164 | 0 | 0 | 0 | 0 | 0 | 0 | 0 | 0 | 0 | 2 | 1 | 0 | 0 | 0 | 1 | 0 | 0 | 3 | 7 | 0 | 2 | 2 | 0 | 6 | 0 | 12 | 240 |
| 9 | DIV,70 | 165 | 1 | 0 | 0 | 0 | 0 | 0 | 0 | 0 | 0 | 2 | 0 | 0 | 0 | 0 | 0 | 0 | 0 | 0 | 0 | 0 | 3 | 0 | 0 | 7 | 0 | 04 | 323 |
| 7 | ASH,41 | 166 | 0 | 0 | 0 | 0 | 1 | 0 | 5 | 0 | 0 | 2 | 0 | 2 | 0 | 0 | 1 | 0 | 1 | 0 | 6 | 0 | 2 | 0 | 0 | 5 | 0 | 03 | 126 |
| 14 | CON,01 | 167 | 1 | 1 | 0 | 0 | 0 | 0 | 0 | 0 | 0 | 2 | 0 | 0 | 0 | 0 | 0 | 2 | 1 | 0 | 0 | 0 | 0 | 0 | 0 | 2 | 0 | 14 | 070 |
| 14 | CON,00 | 170 | 1 | 1 | 0 | 0 | 0 | 0 | 0 | 0 | 0 | 2 | 0 | 0 | 0 | 0 | 0 | 2 | 1 | 0 | 0 | 0 | 0 | 0 | 0 | 2 | 0 | 14 | 070 |
| 6 | D50,30 | 171 | 0 | 0 | 0 | 0 | 1 | 0 | 0 | 0 | 0 | 0 | 0 | 0 | 5 | 0 | 0 | 0 | 0 | 0 | 7 | 0 | 3 | 0 | 0 | 2 | 0 | 00 | 231 |
| 2 | RTI,60 | 172 | 0 | 0 | 0 | 0 | 0 | 0 | 0 | 0 | 0 | 1 | 0 | 0 | 0 | 0 | 0 | 0 | 0 | 2 | 6 | 0 | 0 | 0 | 0 | 0 | 0 | 00 | 217 |
| 2 | FOP,30 | 173 | 1 | 1 | 0 | 0 | 0 | 0 | 0 | 1 | 1 | 2 | 0 | 0 | 0 | 0 | 3 | 0 | 0 | 1 | 0 | 0 | 1 | 0 | 1 | 3 | 4 | 00 | 377 |
| 2 | FOP,20 | 174 | 0 | 0 | 0 | 0 | 0 | 0 | 0 | 0 | 0 | 2 | 0 | 0 | 0 | 0 | 1 | 0 | 0 | 0 | 6 | 0 | 3 | 0 | 0 | 2 | 0 | 10 | 133 |
| 5 | D12,10 | 175 | 1 | 1 | 0 | 0 | 0 | 0 | 0 | 1 | 3 | 2 | 0 | 2 | 5 | 2 | 0 | 0 | 0 | 0 | 6 | 6 | 0 | 0 | 3 | 3 | 2 | 05 | 137 |
| 7 | ASC,31 | 176 | 0 | 0 | 0 | 0 | 1 | 2 | 5 | 0 | 0 | 2 | 0 | 2 | 0 | 0 | 0 | 0 | 1 | 0 | 6 | 0 | 2 | 0 | 0 | 7 | 0 | 03 | 136 |
| 6 | D10,60 | 177 | 1 | 1 | 0 | 0 | 0 | 0 | 0 | 0 | 0 | 2 | 0 | 0 | 0 | 2 | 0 | 0 | 0 | 0 | 6 | 6 | 3 | 0 | 0 | 2 | 2 | 05 | 137 |

| | | |
|---|---|---|
| DRN. | DATE 3/23/72 | TITLE ROM & ROM CONTROL |
| CHK'D. | DATE 3/23/72 | |
| ENG. Steve Jenkins | DATE 3-28-72 | |
| PROJ. ENG. E. Eriksen | DATE 3-28-72 | (ADR 100 - 177) |
| PROD. G. Hurser | DATE 3-30-72 | SIZE K · CODE CS · NUMBER M8103-0-1 · REV. H |
| SHEET 13 OF 15 | | |

| FLOWS | STATE | ADR | BRK | BRX | SRX | DRX | SRK | DRK | CCL | PCA | PCB | SHF | IRK | PWE | PAD | BSD | BAX | IBS | SHC | BCT | MSC | BSC | AMX | BMX | KMX | ALU | FEN | BEN | UAD |
|---|---|---|---|---|---|---|---|---|---|---|---|---|---|---|---|---|---|---|---|---|---|---|---|---|---|---|---|---|---|
| 12 | ZAP,00 | 200 | 0 | 0 | 0 | 0 | 0 | 0 | 0 | 0 | 0 | 2 | 0 | 0 | 0 | 0 | 1 | 0 | 0 | 7 | 6 | 0 | 0 | 0 | 0 | 2 | 0 | 06 | 352 |
| 11 | JSR,10 | 201 | 1 | 0 | 0 | 1 | 0 | 3 | 0 | 0 | 0 | 2 | 0 | 0 | 7 | 0 | 1 | 0 | 0 | 0 | 6 | 0 | 2 | 0 | 0 | 2 | 0 | 00 | 274 |
| 4 | D07,00 | 202 | 0 | 0 | 0 | 0 | 1 | 0 | 0 | 0 | 0 | 0 | 0 | 0 | 0 | 0 | 0 | 0 | 0 | 0 | 0 | 0 | 3 | 0 | 0 | 2 | 0 | 00 | 030 |
| 4 | D07,10 | 203 | 0 | 0 | 0 | 0 | 1 | 0 | 0 | 0 | 0 | 2 | 0 | 0 | 0 | 0 | 0 | 0 | 0 | 0 | 0 | 0 | 3 | 0 | 0 | 2 | 0 | 00 | 030 |
| 4 | D00,80 | 204 | 1 | 0 | 0 | 0 | 0 | 0 | 0 | 0 | 0 | 0 | 0 | 0 | 0 | 0 | 0 | 0 | 0 | 0 | 6 | 0 | 3 | 0 | 0 | 2 | 0 | 00 | 205 |
| 4 | D00,90 | 205 | 0 | 0 | 0 | 0 | 0 | 0 | 1 | 0 | 0 | 2 | 0 | 1 | 5 | 0 | 1 | 0 | 0 | 0 | 7 | 0 | 0 | 3 | 0 | 7 | 0 | 12 | 240 |
| 8 | MUL,40 | 206 | 1 | 0 | 0 | 0 | 0 | 1 | 4 | 0 | 0 | 3 | 0 | 2 | 0 | 0 | 0 | 0 | 0 | 0 | 6 | 0 | 3 | 0 | 0 | 2 | 0 | 00 | 310 |
| 7 | ASC,80 | 207 | 0 | 0 | 0 | 0 | 0 | 0 | 6 | 0 | 0 | 2 | 0 | 0 | 0 | 0 | 1 | 0 | 0 | 0 | 7 | 0 | 0 | 0 | 0 | 2 | 0 | 12 | 240 |
| 3 | NEG,90 | 210 | 0 | 0 | 0 | 0 | 0 | 0 | 1 | 1 | 3 | 2 | 0 | 1 | 5 | 0 | 2 | 0 | 0 | 0 | 6 | 0 | 2 | 0 | 0 | 3 | 0 | 00 | 217 |
| 4 | FOP,50 | 211 | 0 | 0 | 0 | 0 | 0 | 0 | 3 | 0 | 0 | 2 | 0 | 0 | 0 | 0 | 3 | 0 | 0 | 7 | 0 | 0 | 0 | 0 | 0 | 2 | 0 | 00 | 362 |
| 2 | RTI,20 | 212 | 1 | 1 | 0 | 0 | 0 | 3 | 0 | 0 | 0 | 2 | 0 | 2 | 7 | 3 | 2 | 0 | 0 | 0 | 0 | 0 | 2 | 0 | 1 | 3 | 0 | 00 | 213 |
| 2 | RTI,30 | 213 | 0 | 0 | 0 | 0 | 0 | 0 | 0 | 1 | 1 | 1 | 0 | 0 | 7 | 0 | 0 | 0 | 0 | 0 | 7 | 0 | 3 | 0 | 0 | 2 | 0 | 00 | 214 |
| 2 | RTI,40 | 214 | 1 | 1 | 0 | 0 | 0 | 0 | 0 | 0 | 0 | 2 | 0 | 2 | 7 | 2 | 0 | 0 | 0 | 0 | 0 | 0 | 0 | 0 | 1 | 3 | 0 | 00 | 215 |
| 2 | RTI,50 | 215 | 0 | 0 | 0 | 0 | 0 | 0 | 0 | 0 | 0 | 1 | 0 | 0 | 0 | 0 | 0 | 2 | 0 | 0 | 0 | 0 | 0 | 0 | 0 | 0 | 0 | 00 | 172 |
| 10 | DVC,10 | 216 | 1 | 0 | 0 | 0 | 0 | 0 | 0 | 0 | 0 | 2 | 0 | 2 | 4 | 0 | 0 | 0 | 0 | 0 | 0 | 0 | 3 | 2 | 0 | 3 | 0 | 00 | 256 |
| 1 | FET,00 | 217 | 0 | 0 | 0 | 0 | 0 | 0 | 0 | 0 | 0 | 2 | 1 | 0 | 0 | 0 | 1 | 0 | 0 | 3 | 7 | 0 | 2 | 2 | 0 | 6 | 0 | 12 | 240 |
| 10 | DVC,90 | 220 | 0 | 0 | 0 | 0 | 0 | 0 | 4 | 0 | 0 | 2 | 0 | 2 | 0 | 0 | 0 | 0 | 0 | 0 | 6 | 0 | 0 | 0 | 0 | 3 | 0 | 04 | 144 |
| 5 | D30,10 | 221 | 1 | 1 | 0 | 0 | 0 | 0 | 0 | 1 | 3 | 2 | 0 | 2 | 5 | 2 | 0 | 0 | 0 | 0 | 0 | 0 | 0 | 0 | 3 | 3 | 0 | 00 | 233 |
| 13 | SVC,80 | 222 | 0 | 0 | 0 | 0 | 0 | 0 | 0 | 0 | 0 | 1 | 0 | 0 | 7 | 0 | 0 | 0 | 0 | 0 | 7 | 5 | 0 | 0 | 0 | 0 | 0 | 00 | 300 |
| 2 | RTS,10 | 223 | 0 | 0 | 0 | 0 | 0 | 0 | 0 | 0 | 0 | 2 | 0 | 2 | 7 | 0 | 2 | 0 | 0 | 0 | 7 | 0 | 2 | 0 | 1 | 3 | 0 | 00 | 224 |
| 2 | RTS,20 | 224 | 1 | 1 | 0 | 0 | 0 | 0 | 0 | 0 | 0 | 1 | 0 | 0 | 5 | 2 | 2 | 0 | 0 | 0 | 0 | 0 | 0 | 0 | 0 | 0 | 0 | 00 | 342 |
| 12 | FSV,20 | 225 | 0 | 0 | 0 | 0 | 0 | 0 | 0 | 0 | 0 | 1 | 0 | 0 | 0 | 0 | 3 | 0 | 0 | 0 | 6 | 0 | 0 | 0 | 0 | 0 | 0 | 10 | 205 |
| 8 | MUL,50 | 226 | 1 | 0 | 0 | 0 | 0 | 1 | 4 | 0 | 0 | 2 | 0 | 2 | 0 | 0 | 0 | 0 | 0 | 0 | 6 | 0 | 3 | 2 | 0 | 7 | 0 | 00 | 310 |
| 7 | ASC,60 | 227 | 0 | 0 | 0 | 0 | 0 | 0 | 6 | 0 | 0 | 2 | 0 | 2 | 4 | 0 | 1 | 0 | 0 | 0 | 7 | 0 | 0 | 0 | 0 | 2 | 0 | 12 | 240 |
| 14 | CON,20 | 230 | 0 | 0 | 0 | 0 | 0 | 0 | 0 | 0 | 0 | 2 | 0 | 0 | 0 | 0 | 2 | 0 | 0 | 2 | 0 | 0 | 0 | 0 | 0 | 2 | 0 | 00 | 170 |
| 6 | D10,10 | 231 | 1 | 1 | 0 | 0 | 0 | 0 | 0 | 0 | 0 | 2 | 0 | 0 | 0 | 2 | 0 | 0 | 0 | 0 | 0 | 0 | 3 | 0 | 0 | 2 | 0 | 00 | 233 |
| 9 | DIV,20 | 232 | 0 | 0 | 0 | 0 | 0 | 0 | 0 | 0 | 0 | 2 | 0 | 0 | 0 | 0 | 0 | 0 | 0 | 0 | 0 | 0 | 2 | 0 | 0 | 2 | 0 | 04 | 241 |
| 6 | D10,20 | 233 | 0 | 0 | 0 | 0 | 0 | 3 | 0 | 0 | 0 | 2 | 0 | 0 | 0 | 0 | 0 | 0 | 0 | 0 | 6 | 0 | 3 | 0 | 0 | 2 | 0 | 00 | 311 |
| 2 | MRK,30 | 234 | 0 | 0 | 0 | 0 | 0 | 0 | 0 | 0 | 0 | 2 | 0 | 2 | 2 | 0 | 1 | 0 | 0 | 0 | 7 | 0 | 3 | 0 | 0 | 2 | 0 | 12 | 240 |
| 2 | MRK,20 | 235 | 1 | 1 | 0 | 0 | 0 | 0 | 0 | 0 | 0 | 2 | 0 | 2 | 7 | 3 | 0 | 0 | 0 | 0 | 6 | 0 | 0 | 0 | 1 | 3 | 0 | 00 | 234 |
| 10 | DVC,20 | 236 | 1 | 0 | 0 | 0 | 0 | 0 | 0 | 0 | 0 | 2 | 0 | 2 | 4 | 0 | 0 | 0 | 0 | 0 | 0 | 0 | 3 | 2 | 0 | 6 | 0 | 00 | 276 |
| 1 | FET,07 | 237 | 0 | 0 | 0 | 0 | 0 | 0 | 0 | 0 | 0 | 2 | 1 | 0 | 0 | 0 | 1 | 0 | 0 | 3 | 7 | 0 | 2 | 2 | 0 | 6 | 0 | 12 | 240 |

| FLOWS | STATE | ADR | BRK | BRX | SRX | DRX | SRK | DRK | CCL | PCA | PCB | SHF | IRK | PWE | PAD | BSD | BAX | IBS | SHC | BCT | MSC | BSC | AMX | BMX | KMX | ALU | FEN | BEN | UAD |
|---|---|---|---|---|---|---|---|---|---|---|---|---|---|---|---|---|---|---|---|---|---|---|---|---|---|---|---|---|---|
| 12 | BRK,90 | 240 | 0 | 0 | 0 | 0 | 0 | 0 | 0 | 0 | 0 | 2 | 0 | 0 | 0 | 0 | 1 | 0 | 0 | 7 | 0 | 0 | 0 | 0 | 0 | 2 | 0 | 00 | 154 |
| 9 | DVP,00 | 241 | 1 | 0 | 0 | 0 | 0 | 0 | 0 | 0 | 0 | 2 | 0 | 0 | 0 | 0 | 2 | 0 | 0 | 0 | 0 | 0 | 0 | 0 | 0 | 2 | 0 | 00 | 103 |
| 2 | SOB,10 | 242 | 0 | 0 | 0 | 0 | 0 | 0 | 1 | 1 | 2 | 0 | 0 | 0 | 0 | 0 | 2 | 0 | 0 | 0 | 6 | 0 | 3 | 0 | 0 | 2 | 0 | 00 | 262 |
| 9 | DVN,60 | 243 | 1 | 0 | 0 | 0 | 0 | 0 | 0 | 0 | 0 | 2 | 0 | 0 | 0 | 0 | 0 | 0 | 0 | 0 | 0 | 0 | 0 | 0 | 0 | 2 | 0 | 00 | 107 |
| 3 | WAT,20 | 244 | 1 | 1 | 0 | 0 | 0 | 3 | 0 | 0 | 0 | 2 | 0 | 0 | 0 | 1 | 1 | 0 | 0 | 0 | 0 | 0 | 0 | 1 | 1 | 1 | 0 | 12 | 127 |
| 12 | FSV,00 | 245 | 1 | 1 | 0 | 0 | 0 | 0 | 0 | 0 | 0 | 1 | 0 | 0 | 6 | 0 | 0 | 0 | 0 | 1 | 7 | 4 | 0 | 0 | 0 | 0 | 0 | 00 | 150 |
| 8 | MUL,30 | 246 | 1 | 0 | 0 | 0 | 0 | 1 | 4 | 0 | 0 | 3 | 0 | 0 | 0 | 0 | 0 | 0 | 1 | 0 | 0 | 0 | 3 | 0 | 0 | 2 | 0 | 11 | 206 |
| 7 | ASC,30 | 247 | 0 | 0 | 0 | 0 | 1 | 2 | 5 | 0 | 0 | 2 | 0 | 2 | 0 | 0 | 0 | 0 | 1 | 0 | 6 | 0 | 2 | 0 | 0 | 7 | 0 | 03 | 136 |
| 11 | MFP,10 | 250 | 0 | 0 | 0 | 0 | 0 | 3 | 0 | 0 | 0 | 2 | 0 | 2 | 7 | 0 | 0 | 0 | 0 | 7 | 0 | 0 | 2 | 0 | 1 | 6 | 0 | 00 | 222 |
| 6 | D67,10 | 251 | 0 | 0 | 0 | 0 | 0 | 3 | 0 | 0 | 1 | 2 | 0 | 0 | 0 | 0 | 1 | 0 | 0 | 0 | 6 | 0 | 0 | 3 | 0 | 3 | 0 | 01 | 122 |
| 2 | MRK,10 | 252 | 0 | 0 | 0 | 0 | 0 | 0 | 0 | 1 | 1 | 2 | 0 | 0 | 0 | 0 | 0 | 0 | 0 | 0 | 7 | 0 | 2 | 0 | 0 | 2 | 0 | 00 | 235 |
| 12 | BRK,11 | 253 | 0 | 0 | 0 | 0 | 0 | 3 | 0 | 0 | 0 | 2 | 0 | 0 | 0 | 0 | 1 | 0 | 0 | 0 | 0 | 0 | 3 | 0 | 0 | 2 | 0 | 13 | 100 |
| 9 | DIV,10 | 254 | 0 | 0 | 0 | 0 | 0 | 4 | 0 | 0 | 0 | 2 | 0 | 0 | 0 | 0 | 2 | 0 | 0 | 0 | 0 | 0 | 0 | 0 | 0 | 2 | 0 | 02 | 232 |
| 3 | RES,10 | 255 | 0 | 0 | 0 | 0 | 0 | 0 | 0 | 0 | 0 | 2 | 0 | 0 | 0 | 0 | 1 | 0 | 0 | 4 | 0 | 0 | 0 | 0 | 0 | 2 | 0 | 00 | 374 |
| 10 | DVC,30 | 256 | 1 | 0 | 0 | 0 | 0 | 0 | 0 | 0 | 0 | 2 | 0 | 0 | 0 | 0 | 0 | 0 | 0 | 0 | 0 | 0 | 3 | 0 | 0 | 0 | 0 | 04 | 350 |
| 7 | ASH,40 | 257 | 0 | 0 | 0 | 0 | 1 | 0 | 5 | 0 | 0 | 2 | 0 | 2 | 0 | 0 | 1 | 0 | 1 | 0 | 6 | 0 | 2 | 0 | 0 | 5 | 0 | 03 | 126 |
| 1 | FET,10 | 260 | 1 | 1 | 0 | 0 | 0 | 0 | 0 | 1 | 1 | 2 | 1 | 0 | 0 | 3 | 1 | 0 | 0 | 0 | 6 | 0 | 1 | 0 | 1 | 3 | 0 | 00 | 343 |
| 9 | DVN,00 | 261 | 0 | 0 | 1 | 3 | 1 | 0 | 0 | 0 | 0 | 2 | 0 | 0 | 4 | 0 | 0 | 0 | 0 | 0 | 0 | 0 | 2 | 0 | 0 | 2 | 0 | 00 | 104 |
| 2 | SOB,20 | 262 | 0 | 0 | 0 | 0 | 0 | 0 | 0 | 0 | 0 | 2 | 0 | 2 | 0 | 0 | 1 | 0 | 0 | 0 | 7 | 0 | 2 | 0 | 0 | 6 | 0 | 12 | 240 |
| 9 | DVE,10 | 263 | 0 | 0 | 0 | 0 | 0 | 0 | 1 | 0 | 0 | 2 | 0 | 0 | 0 | 0 | 0 | 0 | 0 | 0 | 0 | 0 | 3 | 0 | 0 | 2 | 0 | 00 | 145 |
| 3 | WAT,10 | 264 | 0 | 0 | 0 | 0 | 0 | 0 | 0 | 0 | 0 | 2 | 0 | 0 | 0 | 0 | 1 | 0 | 0 | 0 | 6 | 0 | 0 | 0 | 0 | 2 | 0 | 00 | 011 |
| 1 | FET,09 | 265 | 0 | 0 | 0 | 0 | 0 | 0 | 0 | 0 | 0 | 2 | 1 | 0 | 0 | 0 | 1 | 0 | 0 | 3 | 7 | 0 | 2 | 2 | 0 | 6 | 0 | 12 | 240 |
| 8 | MUL,20 | 266 | 1 | 0 | 0 | 0 | 0 | 1 | 4 | 0 | 0 | 3 | 0 | 0 | 0 | 0 | 0 | 0 | 1 | 0 | 0 | 0 | 3 | 2 | 0 | 3 | 0 | 11 | 206 |
| 7 | ASC,40 | 267 | 0 | 0 | 0 | 0 | 1 | 1 | 1 | 0 | 0 | 3 | 0 | 2 | 0 | 0 | 0 | 0 | 1 | 0 | 6 | 0 | 2 | 0 | 0 | 2 | 0 | 03 | 227 |
| 14 | ADR,00 | 270 | 0 | 0 | 0 | 3 | 1 | 0 | 0 | 1 | 0 | 2 | 0 | 0 | 0 | 0 | 2 | 0 | 0 | 0 | 0 | 0 | 3 | 0 | 0 | 2 | 0 | 00 | 230 |
| 11 | NEG,10 | 271 | 1 | 0 | 0 | 0 | 0 | 0 | 1 | 0 | 0 | 2 | 0 | 0 | 0 | 0 | 0 | 0 | 0 | 0 | 0 | 6 | 3 | 0 | 0 | 3 | 0 | 05 | 123 |
| 9 | DVE,00 | 272 | 0 | 0 | 0 | 0 | 0 | 0 | 1 | 0 | 0 | 2 | 0 | 0 | 0 | 0 | 0 | 0 | 0 | 0 | 6 | 0 | 2 | 0 | 0 | 2 | 0 | 00 | 164 |
| 3 | WAT,11 | 273 | 0 | 0 | 0 | 0 | 0 | 3 | 0 | 0 | 0 | 2 | 0 | 0 | 0 | 0 | 1 | 0 | 0 | 0 | 6 | 0 | 0 | 0 | 0 | 2 | 0 | 00 | 011 |
| 11 | JSR,20 | 274 | 0 | 0 | 0 | 0 | 0 | 3 | 0 | 0 | 0 | 2 | 0 | 2 | 7 | 0 | 0 | 0 | 0 | 0 | 0 | 0 | 0 | 0 | 1 | 6 | 0 | 00 | 275 |
| 11 | JSR,30 | 275 | 0 | 0 | 0 | 0 | 0 | 0 | 0 | 0 | 1 | 1 | 0 | 2 | 0 | 0 | 0 | 0 | 0 | 5 | 7 | 5 | 0 | 0 | 0 | 0 | 0 | 00 | 300 |
| 10 | DVC,40 | 276 | 1 | 0 | 0 | 0 | 0 | 0 | 0 | 0 | 0 | 2 | 0 | 0 | 0 | 0 | 0 | 0 | 0 | 0 | 0 | 0 | 3 | 0 | 0 | 0 | 0 | 04 | 351 |
| 7 | ASH,30 | 277 | 0 | 0 | 0 | 0 | 1 | 0 | 1 | 0 | 0 | 3 | 0 | 2 | 0 | 0 | 1 | 0 | 1 | 0 | 6 | 0 | 2 | 0 | 0 | 2 | 0 | 03 | 237 |

| | | | | |
|---|---|---|---|---|
| DRN. | DATE 3/23/72 | TITLE | | |
| CHK'D | DATE 3/23/72 | ROM & ROM CONTROL | | |
| ENG. | DATE 3-28-72 | | | |
| PROJ. ENG. E. Eriksen | DATE 3-28-72 | (ADR 200-277) | | |
| PROD. | DATE 3-30-72 | SIZE K | CODE CS | NUMBER M8103-01-1 |
| SHEET 14 OF 15 | | | | REV H |

| FLOWS | STATE | ADR | BRK | BRX | SRX | DRX | SRK | DRK | CCL | PCA | PCB | SHF | IRK | PWE | PAD | BSD | BAX | IBS | SHC | BCT | MSC | BSC | AMX | BMX | KMX | ALU | FEN | BEN | UAD |
|---|---|---|---|---|---|---|---|---|---|---|---|---|---|---|---|---|---|---|---|---|---|---|---|---|---|---|---|---|---|
| 13 | SVC,90 | 300 | 0 | 0 | 0 | 0 | 0 | 0 | 0 | 0 | 0 | 2 | 0 | 0 | 0 | 3 | 0 | 0 | 0 | 0 | 6 | 5 | 3 | 0 | 0 | 2 | 0 | 00 | 217 |
| 3 | NEG,70 | 301 | 0 | 0 | 0 | 0 | 1 | 0 | 0 | 0 | 0 | 2 | 0 | 0 | 0 | 0 | 1 | 0 | 0 | 7 | 0 | 0 | 0 | 0 | 0 | 7 | 0 | 00 | 210 |
| 12 | ZAP,30 | 302 | 0 | 0 | 0 | 0 | 0 | 0 | 0 | 0 | 0 | 1 | 0 | 0 | 0 | 0 | 0 | 2 | 0 | 0 | 0 | 0 | 0 | 0 | 0 | 0 | 0 | 00 | 154 |
| 14 | DEP,20 | 303 | 0 | 0 | 0 | 0 | 0 | 3 | 0 | 0 | 0 | 2 | 0 | 0 | 0 | 3 | 2 | 0 | 0 | 0 | 0 | 5 | 3 | 0 | 0 | 2 | 0 | 00 | 230 |
| 11 | MFP,90 | 304 | 1 | 0 | 1 | 0 | 1 | 0 | 1 | 0 | 0 | 2 | 0 | 0 | 7 | 0 | 0 | 0 | 0 | 0 | 0 | 0 | 0 | 0 | 0 | 2 | 0 | 00 | 250 |
| 7 | ASH,20 | 305 | 0 | 0 | 0 | 0 | 0 | 0 | 4 | 0 | 0 | 2 | 0 | 0 | 0 | 0 | 0 | 0 | 1 | 0 | 6 | 0 | 2 | 0 | 0 | 2 | 0 | 03 | 217 |
| 7 | ASC,20 | 306 | 0 | 0 | 0 | 0 | 0 | 0 | 4 | 0 | 0 | 2 | 0 | 0 | 0 | 0 | 0 | 0 | 1 | 0 | 6 | 0 | 2 | 0 | 0 | 2 | 0 | 03 | 207 |
| 14 | RDP,10 | 307 | 0 | 0 | 0 | 0 | 0 | 3 | 0 | 1 | 3 | 2 | 0 | 2 | 5 | 0 | 2 | 0 | 0 | 0 | 0 | 3 | 0 | 0 | 0 | 2 | 0 | 00 | 230 |
| 8 | MUL,60 | 310 | 0 | 0 | 0 | 0 | 0 | 0 | 1 | 0 | 0 | 2 | 0 | 2 | 4 | 0 | 1 | 0 | 0 | 0 | 7 | 0 | 0 | 0 | 0 | 2 | 0 | 12 | 240 |
| 6 | D10,50 | 311 | 1 | 0 | 0 | 0 | 0 | 0 | 0 | 0 | 0 | 2 | 0 | 0 | 6 | 0 | 0 | 0 | 0 | 0 | 7 | 6 | 2 | 0 | 0 | 2 | 2 | 15 | 157 |
| 5 | D12,20 | 312 | 0 | 0 | 0 | 0 | 0 | 0 | 1 | 0 | 0 | 2 | 0 | 0 | 5 | 0 | 1 | 0 | 0 | 0 | 7 | 0 | 3 | 0 | 0 | 2 | 0 | 12 | 240 |
| 9 | DIV,60 | 313 | 0 | 0 | 0 | 0 | 0 | 0 | 0 | 0 | 0 | 2 | 0 | 0 | 0 | 0 | 0 | 0 | 0 | 0 | 0 | 3 | 0 | 0 | 2 | 0 | 05 | 145 |
| 14 | RAD,10 | 314 | 0 | 0 | 0 | 2 | 0 | 3 | 0 | 0 | 0 | 1 | 0 | 0 | 5 | 0 | 2 | 0 | 0 | 0 | 0 | 0 | 0 | 0 | 0 | 0 | 0 | 00 | 230 |
| 12 | ZAP,20 | 315 | 1 | 0 | 0 | 0 | 0 | 0 | 0 | 1 | 1 | 1 | 0 | 0 | 0 | 0 | 0 | 0 | 0 | 0 | 0 | 0 | 2 | 0 | 0 | 2 | 0 | 00 | 302 |
| 4 | FOP,70 | 316 | 0 | 0 | 0 | 0 | 0 | 0 | 0 | 0 | 0 | 2 | 0 | 0 | 0 | 0 | 3 | 0 | 0 | 0 | 0 | 0 | 3 | 0 | 0 | 2 | 0 | 17 | 316 |
| 2 | S13,20 | 317 | 0 | 0 | 0 | 0 | 1 | 1 | 0 | 0 | 0 | 2 | 0 | 0 | 1 | 0 | 1 | 0 | 0 | 0 | 0 | 0 | 3 | 0 | 0 | 2 | 0 | 00 | 143 |
| 1 | BXX,00 | 320 | 0 | 0 | 0 | 0 | 0 | 1 | 0 | 1 | 1 | 2 | 0 | 0 | 1 | 0 | 1 | 0 | 0 | 7 | 6 | 0 | 1 | 1 | 3 | 3 | 0 | 00 | 217 |
| 1 | FET,11 | 321 | 1 | 1 | 0 | 0 | 0 | 0 | 0 | 1 | 1 | 2 | 1 | 0 | 0 | 3 | 1 | 0 | 0 | 0 | 6 | 0 | 1 | 0 | 1 | 3 | 0 | 00 | 343 |
| 1 | FET,12 | 322 | 1 | 1 | 0 | 0 | 0 | 0 | 0 | 1 | 1 | 2 | 1 | 0 | 0 | 3 | 1 | 0 | 0 | 0 | 6 | 0 | 1 | 0 | 1 | 3 | 0 | 00 | 343 |
| 9 | DIV,80 | 323 | 1 | 0 | 0 | 0 | 0 | 2 | 0 | 0 | 0 | 2 | 0 | 0 | 0 | 0 | 0 | 0 | 1 | 0 | 0 | 0 | 3 | 2 | 0 | 6 | 0 | 03 | 125 |
| 1 | FET,13 | 324 | 1 | 1 | 0 | 0 | 0 | 0 | 0 | 1 | 1 | 2 | 1 | 0 | 0 | 3 | 1 | 0 | 0 | 0 | 6 | 0 | 1 | 0 | 1 | 3 | 0 | 00 | 343 |
| 1 | BXX,01 | 325 | 0 | 0 | 0 | 0 | 0 | 0 | 0 | 1 | 1 | 2 | 0 | 0 | 0 | 0 | 1 | 0 | 0 | 7 | 6 | 0 | 1 | 1 | 3 | 3 | 0 | 00 | 217 |
| 1 | BXX,02 | 326 | 0 | 0 | 0 | 0 | 0 | 0 | 0 | 1 | 1 | 2 | 0 | 0 | 0 | 0 | 1 | 0 | 0 | 7 | 6 | 0 | 1 | 1 | 3 | 3 | 0 | 00 | 217 |
| 3 | HLT,10 | 327 | 0 | 0 | 0 | 0 | 0 | 0 | 0 | 0 | 0 | 2 | 0 | 0 | 0 | 0 | 1 | 0 | 0 | 0 | 3 | 0 | 3 | 0 | 0 | 2 | 0 | 06 | 124 |
| 1 | BXX,03 | 330 | 0 | 0 | 0 | 0 | 0 | 0 | 0 | 1 | 1 | 2 | 0 | 0 | 0 | 0 | 1 | 0 | 0 | 7 | 6 | 0 | 1 | 1 | 3 | 3 | 0 | 00 | 217 |
| 1 | FET,01 | 331 | 0 | 0 | 0 | 0 | 0 | 0 | 0 | 0 | 0 | 2 | 1 | 0 | 0 | 0 | 1 | 0 | 0 | 3 | 7 | 0 | 2 | 2 | 0 | 6 | 0 | 12 | 240 |
| 1 | FET,02 | 332 | 0 | 0 | 0 | 0 | 0 | 0 | 0 | 0 | 0 | 2 | 1 | 0 | 0 | 0 | 1 | 0 | 0 | 3 | 7 | 0 | 2 | 2 | 0 | 6 | 0 | 12 | 240 |
| 12 | PUP,20 | 333 | 1 | 1 | 0 | 0 | 1 | 0 | 0 | 0 | 0 | 2 | 0 | 0 | 0 | 3 | 0 | 0 | 0 | 0 | 0 | 0 | 0 | 0 | 1 | 3 | 0 | 00 | 340 |
| 1 | FET,03 | 334 | 0 | 0 | 0 | 0 | 0 | 0 | 0 | 0 | 0 | 2 | 1 | 0 | 0 | 0 | 1 | 0 | 0 | 3 | 7 | 0 | 2 | 2 | 0 | 6 | 0 | 12 | 240 |
| 1 | BXX,04 | 335 | 0 | 0 | 0 | 0 | 0 | 0 | 0 | 1 | 1 | 2 | 0 | 0 | 0 | 0 | 1 | 0 | 0 | 7 | 6 | 0 | 1 | 1 | 3 | 3 | 0 | 00 | 217 |
| 1 | BXX,05 | 336 | 0 | 0 | 0 | 0 | 0 | 0 | 0 | 1 | 1 | 2 | 0 | 0 | 0 | 0 | 1 | 0 | 0 | 7 | 6 | 0 | 1 | 1 | 3 | 3 | 0 | 00 | 217 |
| 13 | XXX,XX | 337 | 0 | 0 | 0 | 0 | 0 | 0 | 0 | 0 | 0 | 2 | 0 | 0 | 0 | 0 | 1 | 0 | 0 | 0 | 0 | 0 | 0 | 0 | 0 | 2 | 0 | 00 | 337 |

| FLOWS | STATE | ADR | BRK | BRX | SRX | DRX | SRK | DRK | CCL | PCA | PCB | SHF | IRK | PWE | PAD | BSD | BAX | IBS | SHC | BCT | MSC | BSC | AMX | BMX | KMX | ALU | FEN | BEN | UAD |
|---|---|---|---|---|---|---|---|---|---|---|---|---|---|---|---|---|---|---|---|---|---|---|---|---|---|---|---|---|---|
| 12 | PUP,30 | 340 | 0 | 0 | 0 | 0 | 0 | 0 | 0 | 1 | 1 | 2 | 0 | 0 | 6 | 0 | 2 | 0 | 0 | 0 | 7 | 0 | 3 | 0 | 0 | 2 | 0 | 00 | 341 |
| 12 | PUP,40 | 341 | 1 | 1 | 0 | 0 | 0 | 0 | 0 | 0 | 0 | 1 | 0 | 0 | 0 | 3 | 2 | 0 | 0 | 0 | 0 | 0 | 0 | 0 | 0 | 0 | 0 | 00 | 215 |
| 2 | RTS,30 | 342 | 0 | 0 | 0 | 0 | 0 | 0 | 0 | 1 | 3 | 2 | 0 | 2 | 5 | 0 | 2 | 0 | 0 | 0 | 6 | 0 | 3 | 0 | 0 | 2 | 0 | 00 | 217 |
| 1 | IRD,00 | 343 | 0 | 0 | 2 | 2 | 1 | 3 | 0 | 1 | 0 | 1 | 0 | 0 | 1 | 0 | 1 | 0 | 0 | 0 | 5 | 0 | 1 | 0 | 1 | 3 | 1 | 02 | 377 |
| 12 | SER,10 | 344 | 0 | 0 | 0 | 0 | 0 | 0 | 0 | 0 | 0 | 2 | 0 | 2 | 7 | 0 | 1 | 0 | 0 | 0 | 0 | 0 | 2 | 0 | 1 | 3 | 0 | 00 | 140 |
| 12 | RSD,10 | 345 | 0 | 0 | 0 | 0 | 0 | 3 | 0 | 0 | 0 | 2 | 0 | 0 | 0 | 0 | 0 | 0 | 0 | 0 | 0 | 0 | 0 | 0 | 0 | 5 | 0 | 00 | 354 |
| 9 | DIV,40 | 346 | 1 | 0 | 0 | 0 | 0 | 2 | 6 | 0 | 0 | 2 | 0 | 0 | 0 | 0 | 0 | 0 | 1 | 0 | 0 | 0 | 3 | 2 | 0 | 6 | 0 | 00 | 313 |
| 12 | PUP,10 | 347 | 0 | 0 | 0 | 0 | 0 | 0 | 0 | 0 | 0 | 2 | 0 | 0 | 6 | 0 | 0 | 0 | 0 | 0 | 7 | 0 | 0 | 1 | 0 | 1 | 0 | 00 | 333 |
| 10 | DVC,70 | 350 | 0 | 0 | 0 | 0 | 0 | 0 | 4 | 0 | 0 | 2 | 0 | 2 | 0 | 0 | 0 | 0 | 0 | 0 | 6 | 0 | 0 | 0 | 0 | 2 | 0 | 00 | 164 |
| 10 | DVC,80 | 351 | 0 | 0 | 1 | 0 | 1 | 3 | 4 | 0 | 0 | 2 | 0 | 0 | 0 | 0 | 0 | 0 | 0 | 0 | 0 | 0 | 0 | 0 | 0 | 0 | 0 | 00 | 220 |
| 12 | BRK,01 | 352 | 1 | 1 | 0 | 0 | 1 | 0 | 0 | 0 | 0 | 2 | 0 | 0 | 0 | 1 | 1 | 0 | 0 | 0 | 0 | 0 | 1 | 0 | 0 | 2 | 0 | 12 | 130 |
| 10 | DVD,10 | 353 | 0 | 0 | 0 | 0 | 0 | 0 | 1 | 0 | 0 | 2 | 0 | 0 | 0 | 0 | 0 | 0 | 0 | 0 | 0 | 0 | 2 | 0 | 0 | 2 | 0 | 00 | 145 |
| 12 | TRP,10 | 354 | 0 | 0 | 0 | 0 | 0 | 0 | 1 | 0 | 0 | 2 | 0 | 0 | 6 | 0 | 0 | 0 | 0 | 0 | 7 | 2 | 3 | 0 | 0 | 2 | 0 | 00 | 355 |
| 13 | SVC,00 | 355 | 1 | 1 | 0 | 0 | 0 | 3 | 0 | 0 | 0 | 2 | 0 | 0 | 0 | 3 | 0 | 0 | 0 | 0 | 0 | 2 | 0 | 0 | 1 | 3 | 0 | 00 | 065 |
| 1 | FET,08 | 356 | 0 | 0 | 0 | 0 | 0 | 0 | 0 | 0 | 0 | 2 | 1 | 0 | 0 | 0 | 1 | 0 | 0 | 3 | 7 | 0 | 2 | 2 | 0 | 6 | 0 | 12 | 240 |
| 13 | SVC,20 | 357 | 1 | 1 | 0 | 0 | 0 | 3 | 0 | 1 | 1 | 1 | 0 | 0 | 0 | 3 | 0 | 0 | 0 | 0 | 0 | 2 | 3 | 0 | 0 | 2 | 0 | 00 | 360 |
| 13 | SVC,30 | 360 | 1 | 0 | 0 | 0 | 0 | 0 | 0 | 1 | 0 | 2 | 0 | 0 | 7 | 0 | 0 | 2 | 0 | 0 | 2 | 0 | 0 | 0 | 0 | 2 | 0 | 00 | 367 |
| 3 | SPL,10 | 361 | 0 | 0 | 0 | 0 | 0 | 0 | 0 | 0 | 0 | 1 | 0 | 0 | 0 | 0 | 1 | 0 | 0 | 3 | 7 | 0 | 0 | 0 | 0 | 0 | 0 | 00 | 260 |
| 4 | FOP,60 | 362 | 1 | 0 | 0 | 0 | 0 | 0 | 0 | 0 | 0 | 2 | 0 | 0 | 0 | 0 | 3 | 0 | 0 | 0 | 1 | 0 | 0 | 0 | 0 | 2 | 0 | 00 | 316 |
| 9 | DIV,90 | 363 | 1 | 0 | 0 | 0 | 0 | 2 | 0 | 0 | 0 | 2 | 0 | 0 | 0 | 0 | 0 | 0 | 1 | 0 | 0 | 0 | 3 | 2 | 0 | 3 | 0 | 03 | 125 |
| 13 | XXX,XX | 364 | 0 | 0 | 0 | 0 | 0 | 0 | 0 | 0 | 0 | 2 | 0 | 0 | 0 | 0 | 1 | 0 | 0 | 0 | 0 | 0 | 0 | 0 | 0 | 2 | 0 | 00 | 364 |
| 13 | XXX,XX | 365 | 0 | 0 | 0 | 0 | 0 | 0 | 0 | 0 | 0 | 2 | 0 | 0 | 0 | 0 | 1 | 0 | 0 | 0 | 0 | 0 | 0 | 0 | 0 | 2 | 0 | 00 | 365 |
| 9 | DIV,50 | 366 | 1 | 0 | 0 | 0 | 0 | 2 | 6 | 0 | 0 | 2 | 0 | 0 | 0 | 0 | 0 | 0 | 1 | 0 | 0 | 0 | 3 | 2 | 0 | 3 | 0 | 00 | 313 |
| 13 | SVC,40 | 367 | 0 | 0 | 0 | 1 | 0 | 3 | 0 | 0 | 0 | 1 | 0 | 0 | 7 | 0 | 0 | 0 | 0 | 0 | 0 | 0 | 0 | 0 | 0 | 0 | 0 | 00 | 037 |
| 10 | DVC,50 | 370 | 0 | 0 | 0 | 0 | 0 | 0 | 0 | 0 | 0 | 2 | 0 | 2 | 4 | 0 | 0 | 0 | 0 | 0 | 0 | 0 | 3 | 0 | 0 | 3 | 0 | 00 | 351 |
| 10 | DVC,60 | 371 | 0 | 0 | 0 | 0 | 0 | 0 | 0 | 0 | 0 | 2 | 0 | 2 | 4 | 0 | 0 | 0 | 0 | 0 | 0 | 0 | 3 | 0 | 0 | 3 | 0 | 00 | 350 |
| 12 | ZAP,10 | 372 | 0 | 0 | 0 | 0 | 0 | 0 | 0 | 0 | 1 | 1 | 0 | 0 | 0 | 0 | 0 | 0 | 0 | 0 | 0 | 0 | 0 | 0 | 0 | 0 | 0 | 00 | 315 |
| 1 | FET,06 | 373 | 0 | 0 | 0 | 0 | 0 | 0 | 0 | 0 | 0 | 2 | 1 | 0 | 0 | 0 | 1 | 0 | 0 | 3 | 7 | 0 | 2 | 2 | 0 | 6 | 0 | 12 | 240 |
| 3 | RES,20 | 374 | 0 | 0 | 0 | 0 | 0 | 0 | 0 | 0 | 0 | 2 | 0 | 0 | 0 | 0 | 1 | 0 | 0 | 2 | 6 | 0 | 0 | 0 | 0 | 2 | 0 | 10 | 334 |
| 4 | FOP,90 | 375 | 0 | 0 | 0 | 0 | 0 | 0 | 0 | 0 | 0 | 2 | 0 | 2 | 5 | 0 | 3 | 0 | 0 | 0 | 1 | 0 | 3 | 0 | 0 | 2 | 0 | 00 | 316 |
| 4 | FOP,80 | 376 | 1 | 1 | 0 | 0 | 0 | 0 | 0 | 0 | 0 | 2 | 0 | 0 | 0 | 0 | 3 | 0 | 0 | 1 | 0 | 0 | 3 | 0 | 0 | 2 | 0 | 00 | 375 |
| 13 | XXX,XX | 377 | 0 | 0 | 0 | 0 | 0 | 0 | 0 | 0 | 0 | 2 | 0 | 0 | 0 | 0 | 1 | 0 | 0 | 0 | 0 | 0 | 0 | 0 | 0 | 2 | 0 | 00 | 377 |

| | | | | |
|---|---|---|---|---|
| DRN. | DATE 3/23/72 | TITLE | | |
| CHK'D | DATE 3/23/72 | ROM & ROM CONTROL | | |
| ENG. Stan Jenkins | DATE 3-28-72 | | | |
| PROJ. ENG. E. Erikson | DATE 3-28-72 | (ADR 300 - 377) | | |
| PROD. G. Hurst | DATE 3-30-72 | SIZE K | CODE CS | NUMBER M8103-0-1 |
| SHEET 15 OF 15 | | | | REV. H |

This drawing and specifications, herein, are the property of Digital Equipment Corporation and shall not be reproduced or copied or used in whole or in part as the basis for the manufacture or sale of items without written permission.

NOTES:
1. UNLESS OTHERWISE NOTED RESISTANCE IS IN Ω AND CAPACITANCE IS IN PICOFARADS. CAPS. WITHOUT VALUE NOTED ARE .01, MFD.

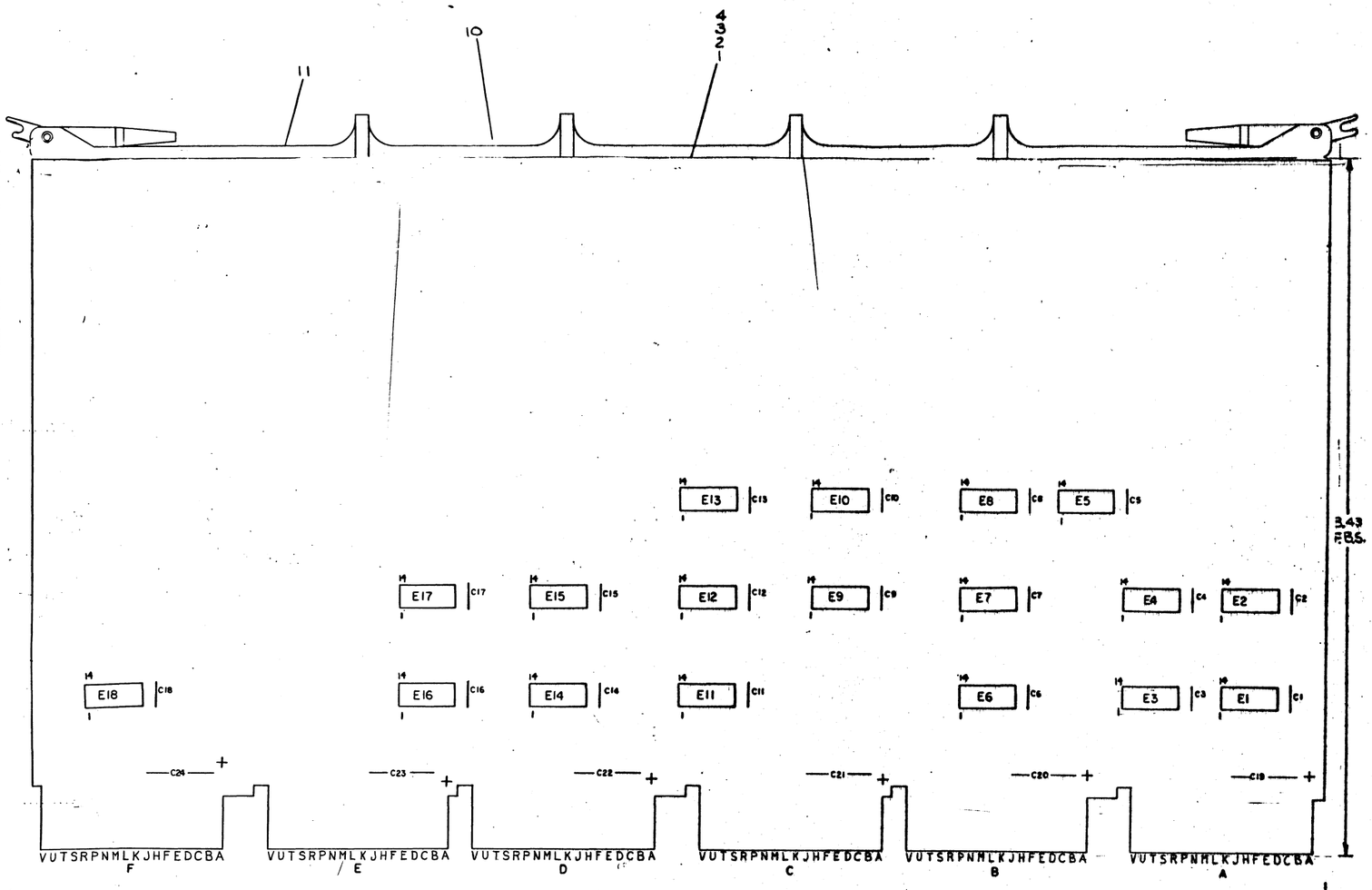


AA2, AV1, BA2, BV1,
CA2, CV1, DA2, DV1,
EA2, EV1, FA2, FV1

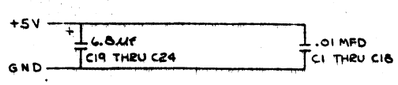


AC2, AN2, AT1
BC2, BN2, BT1
CC2, CN2, CT1
DC2, DN2, DT1
EC2, EN2, ET1
FC2

| QTY | REF DESIGNATION | DESCRIPTION | PART NO. | ITEM NO. |
|---|---|---|---|---|
| 1 | | HANDLE, MODULE | E-PS-1210711-2 | 11 |
| 12 | | EYELET | 9006732 | 10 |
| 6 | E1, E2, E6, E10, E14, E17 | IC DEC 74S11 | 1910537 | 9 |
| 5 | E8, E7, E9, E11, E12 | IC DEC 8881 | 1909705 | 8 |
| 7 | E3, E4, E5, E13, E15, E16, E18 | IC DEC 7404 | 1909686 | 7 |
| 18 | C1 THRU C18 | CAPACITOR .01uF,100V,20% DISC | 1001610 | 6 |
| 6 | C19 THRU C24 | CAPACITOR 6.8uF,35V,10% | 1005306 | 5 |
| 1 | | ETCHED CIRCUIT BOARD | 5009950 | 4 |
| REF | | MODULE ECO HISTORY | B-MH-M8116-0-4 | 3 |
| REF | | ASSY/DRILLING HOLE LAYOUT | E-AH-M8116-0-5 | 2 |
| REF | | X-Y COORDINATE HOLE LOCATION | K-CO-M8116-0-4 | 1 |

PARTS LIST

ETCH BOARD REV | A | B | C

| IC TYPE | GND | +5V |
|---|---|---|
| GND AND 5V ARE USUALLY PIN 7 AND 14 RESPECTIVELY EXCEPTIONS ARE STATED ABOVE | | |

IC PIN LOCATIONS

| ITEM NO. | AWG | FROM PT | TO PT |
|---|---|---|---|

JUMPER LIST

| DEC NO. | EIA NO. | DEC NO. | EIA NO. |
|---|---|---|---|

SEMICONDUCTOR CONVERSION CHART

| REV | DESCRIPTION | DATE | APPROVED |
|---|---|---|---|
| A | ECO M816-00001 | 3/28/72 | R.C. GRAY |
| B | ECO M816-00002 | 11/3/72 | R.C. GRAY |

DRAWN K.W. 2-17-72
CHK'D
ENG
PROJ. ENG
PROD
NEXT HIGHER ASSY B-CD-11/45-C
SCALE 2/1
SHEET 1 OF 3

DIGITAL EQUIPMENT CORPORATION MAYNARD, MASSACHUSETTS

TITLE: SYSTEM ADDRESS BUFFERS

SIZE E | NUMBER M8116-0-1 | REV. B

DEC FORM NO. DEC 104

B.C.SM8116-0-1

This drawing and specifications, herein, are the property of Digital Equipment Corporation and shall not be reproduced or copied or used in whole or in part as the basis for the manufacture or sale of items without written permission.



UBCA CPBSY B H
CL2
8881 E7
BR1
BUSA A00 L
+3V
74S11 E2
AF2
DAPB BAMX00 H
74Φ4 E4
AR2
(SAPK DISP ADR ΦΦ H)
BT2
DAPC BAMXΦ6 H
74S11 E8
BP2
(SAPJ PA06 H)
8881 E7
BN1
BUSA AØ2 L
AK2
DAPB BAMXØ2 H
AF1
(SAPK DISP ADRØ2 H)
CB1
DAPC BAMXØ8 H
CA1
(SAPJ PAØ8 H)
8881 E9
BH2
BUSA AØ8 L
DM1
DAPD BAMX13 H
CD2
(SAPJ PA13 H)
8881 E11
CT2
BUSA A13 L
DL2
(SAPK DISP ADR13 H)
8881 E9
CM2
BUSA A1Ø L
DR1
DAPD BAMX14 H
CJ2
BUSA A14 L
DL1
(SAPK DISP ADR14 H)
8881 E11
CU1
BUSA A15 L
DK2
(SAPK DISP ADR15 H)
8881 E6
BK2
BUSA AØ7 L
AS2
(SAPK DISP ADRØ1 H)
BM2
DAPC BAMXØ7 H
BL2
(SAPJ PAØ7 H)
8881 E12
CP2
BUSA A12 L
EC1
(SAPK DISP ADR12 H)
EE1
DAPD BAMX12 H
CK2
(SAPJ PA12 H)
8881 E7
BM1
BUSA AØ3 L
AK1
(SAPK DISP ADRØ3 H)
EH2
DAPC BAMXØ9 H
BV2
(SAPJ PAØ9 H)
8881 E9
CS1
BUSA AØ9 L
ED2
(SAPK DISP ADRØ9 H)
DR1
DAPD BAMX14 H
CJ1
(SAPJ PA14 H)
8881 E6
BL1
BUSA AØ4 L
AE1
(SAPK DISP ADRØ4 H)
EE2
DAPC BAMX1Ø H
CH2
(SAPJ PA1Ø H)
8881 E9
CM2
BUSA A1Ø L
ED1
(SAPK DISP ADR1Ø H)
DK1
DAPD BAMX15 H
CF2
(SAPJ PA15 H)
8881 E6
BK1
BUSA AØ5 L
AJ1
(SAPK DISP ADRØ5 H)
EA1
DAPC BAMX11 H
CE2
(SAPJ PA11 H)
8881 E9
CP1
BUSA A11 L
EF1
(SAPK DISP ADR11 H)
7404 E15
7404 E18
+3V

ADDRESS LINES 0 - 15 SLOT 14

| FIRST USED ON OPTION/MODEL | QTY. | DESCRIPTION | PART NO. | ITEM NO. |
|---|---|---|---|---|
| 11/45 | PARTS LIST | | | |

UNLESS OTHERWISE SPECIFIED DIMENSION IN INCHES. TOLERANCES
DECIMALS: .XXX = .005, .XX = .02, .X = 1 — ANGLES: ±0° 30'
REMOVE BURRS AND BREAK SHARP CORNERS SURFACE QUALITY ✓
MATERIAL —
FINISH —

DRN. [illegible] DATE 11-19-71
CHK'D. [illegible] DATE 3/2/72
ENG. [illegible] DATE 3/2/72
PROJ. ENG. [illegible] DATE 3/2/72
PROD. [illegible] DATE 3/15/72
NEXT HIGHER ASSY. B-CD-11-15-0
SCALE —
SHEET 2 OF 3

digital EQUIPMENT CORPORATION MAYNARD MASSACHUSETTS

TITLE
SYSTEM ADDRESS BUFFERS (SJBA)

| SIZE | CODE | NUMBER | REV. |
|---|---|---|---|
| D | CS | M-116-0-1 | B |

DIST.

REVISIONS | REV | CHANGE NO | CHK

BRUNING 40-522 15840
DEC FORM NO DRD 102-B

SIZE D CODE CS NUMBER M8116-0-1 REV B

This drawing and specifications, herein, are the property of Digital Equipment Corporation and shall not be reproduced or copied or used in whole or in part as the basis for the manufacture or sale of items without written permission.

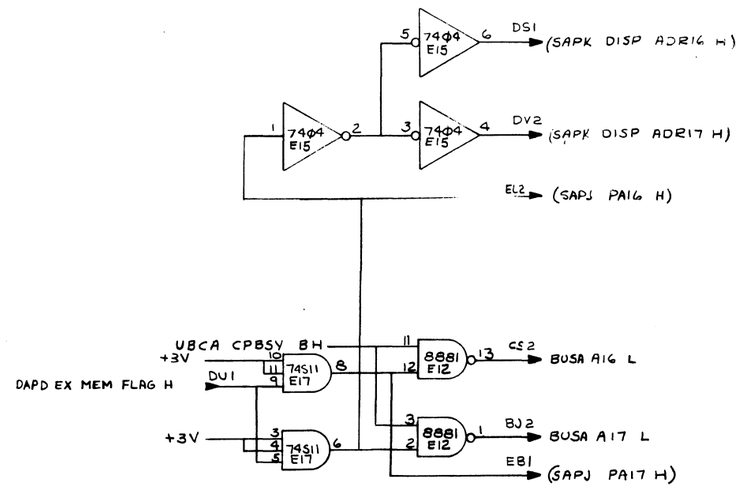


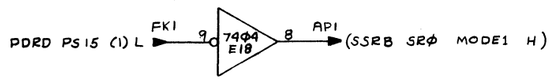


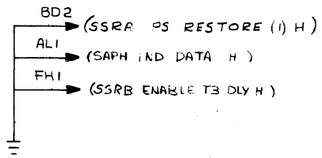


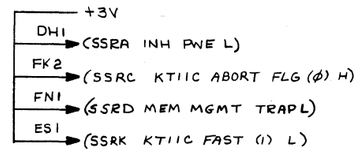


MISC. SIGNALS AND ADRS. LINES 16 & 17 — SLOT 14

| FIRST USED ON OPTION/MODEL | QTY. | DESCRIPTION | PART NO. | ITEM NO. |
|---|---|---|---|---|
| 11/45 | | PARTS LIST | | |

UNLESS OTHERWISE SPECIFIED DIMENSION IN INCHES. TOLERANCES

| DECIMALS | ANGLES |
|---|---|
| .XXX ± .005<br>.XX ± .02<br>.X ± .1 | ±0° 30' |

REMOVE BURRS AND BREAK SHARP CORNERS SURFACE QUALITY ✓

MATERIAL —

FINISH —

| | | |
|---|---|---|
| DRN. K. [illegible] | DATE | 11-18-71 |
| CHK'D. [illegible] | DATE | 3/72 |
| ENG. [illegible] | DATE | [illegible] |
| PROJ. ENG. [illegible] | DATE | 12/72 |
| PROD. [illegible] | DATE | 3/31/72 |

NEXT HIGHER ASSY. B-DD-11/45-0

SCALE —

SHEET 3 OF 3

digital EQUIPMENT CORPORATION MAYNARD MASSACHUSETTS

TITLE: SYSTEM ADDRESS BUFFERS (SJBB)

| SIZE | CODE | NUMBER | REV. |
|---|---|---|---|
| D | CS | M8116-Ø-1 | B |

DIST.

| REVISIONS | REV. | CHANGE NO | CHK |
|---|---|---|---|
| | | | |

BRUNING 40522 15M0

DEC. FORM NO. DRD 102-B

SIZE D CODE CS NUMBER M8116-Ø-1 REV B

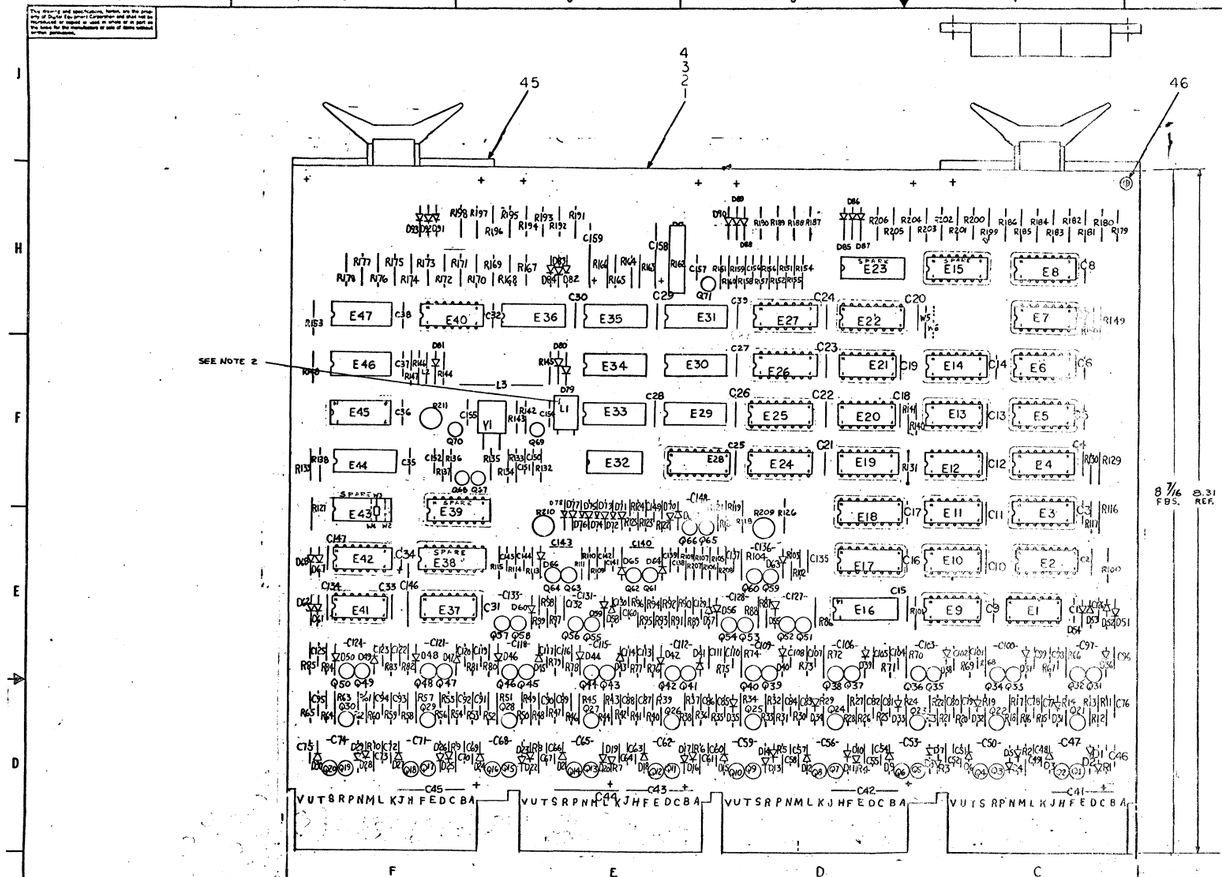


NOTES:
1. UNLESS OTHERWISE NOTED: RESISTANCE IS IN Ω, CAPACITANCE IS IN PICOFARADS. CAPS WITHOUT VALUE NOTED ARE .22 MFD 50V. DIODES ARE TYPE FD777 ALL NPN TRANSISTORS ARE DEC 3009 B-E PNP TRANSISTORS ARE DEC 4258.
2. BOND L1 TO ETCHED BOARD

| | | | |
|---|---|---|---|
| CA2 | CV1 | DA2 | DV1 |
| EA2 | EV1 | FA2 | FV1 |
| CC2 | CN2 | CH1 | CT1 |
| DC2 | DN2 | DH1 | DT1 |
| EC2 | EN2 | EH1 | ET1 |
| FC2 | FN2 | FH1 | FT1 |

+5V
GND
6.8 µf C41, C42
C43, C45
.01 µf C1 THRU C38
6.8 µf C44 EA1 +15V
6.8 µf C46 EB2 -15V

| QTY | REF DESIGNATION | DESCRIPTION | PART NO. | ITEM NO. |
|---|---|---|---|---|
| 2 | R209, R210 | POT. 2K 1/2 W | 13-09150-07 | 51 |
| 1 | R211 | POT. 100 1/2 W | 13-09150-05 | 50 |
| 1 | R136 | RES. 120 1/4 W 5% | 13-00247 | 49 |
| 3 | E6, E26 E27 | IC DEC 74S14-45 | 1410950 | 48 |
| 2 | W3, W5 | JUMPER INSULATED | 9009185 | 47 |
| 8 | | EYELET #654-1 | 9006132 | 46 |
| 4 | | HANDLE FLIP-CHIP MAGENTA | 9008337-06 | 45 |
| 1 | Y1 | CRYSTAL 33.333MHZ | 1810694-1 | 44 |
| 1 | L2 | INDUCTOR .47uh NYTRONICS WEE-WEE -047 | 1610999 | 43 |
| 1 | L1 | INDUCTOR .22 uh VARIABLE NYTRONICS WEE VL .22 | 1611000 | 42 |
| 1 | L3 | INDUCTOR RFCS 33 uh | 1601759 | 41 |

PARTS LIST

| QTY | REF DESIGNATION | DESCRIPTION | PART NO. | ITEM NO. |
|---|---|---|---|---|
| 36 | Q1, Q3, Q5, Q7, Q9, Q11, Q13, Q15, Q17, Q19, Q21, Q23, Q25, Q27 THRU Q30, Q51, Q54, Q56, Q58, Q59, Q61, Q63, Q66, Q67, Q69, Q70 | TRANSISTOR DEC 3009 B | 1503107 | 40 |
| 36 | Q2, Q4, Q6, Q8, Q10, Q12, Q14, Q16, Q18, Q20, Q26 THRU Q30, Q31 THRU Q50, Q52, Q53, Q57, Q60, Q62, Q64, Q65, Q68, Q71, Q55 | TRANSISTOR DEC 3009 B | 1503107 | 39 |
| 1 | E35 | IC DEC 74S10 | 1910546 | 38 |
| 8 | E2, E17, E10, E22, E24-E25, E28, E44 | IC DEC 74S112 | 1910545 | 37 |
| 5 | E5, E9, E19, E29, E33 | IC DEC 74S74 | 1910538 | 36 |
| 4 | E11, E12 | IC DEC 74S65 | 1910543 | 35 |
| 1 | E32 | IC DEC 74S64 | 1910542 | 34 |
| 6 | E1, E3, E14, E16, E31, E41 | IC DEC 74S40 | 1410541 | 33 |
| 2 | E30, E36 | IC DEC 74S20 | 1910539 | 32 |
| 3 | E13, E15, E47 | IC DEC 74S11 | 1910537 | 31 |
| 5 | E18, E23, E37, E39, E45 | IC DEC 74S04 | 1910536 | 30 |
| 4 | E20, E21, E34, E42 | IC DEC 74S00 | 1910532 | 29 |
| 1 | R162 | POT 1K 3/4W 10% | 1309143-07 | 28 |
| 9 | R117, R130, R151, R140, R147, R150, R153, R163, R166 | RES. 680 1/4W 5% | 1301424 | 27 |
| 1 | R142 | RES. 150 1/4W 5% | 1301401 | 26 |
| 13 | R66, R68, R70, R72, R74, R76, R78, R80, R110, R111, R1 | RES. 1.2K 1/4W 5% | 1301320 | 25 |
| 24 | R13, R15, R18, R20, R28, R30, R33, R41, R44, R47, R50, R53, R56, R54, R62, R65, R68, R104, R115, R152 | RES. 10 1/4W 5% | 1301317 | 24 |
| 5 | R12 R17 R22, R27, R32 | RES. 15K 1/4 5% | 1300496 | 23 |
| 22 | R1 THRU R10 R40 R46 R52 R58 R64 R67 R69 R71 R73 R75 R99 R113 | RES. 4.7K 1/4 5% | 1300147 | 22 |
| 7 | R77, R77, R81, R83, R85, R96, R103 | RES. 3K 1/4 5% | 1300432 | 21 |
| 6 | R11, R16, R21, R26, R31, R143 | RES. 15K 1/4 5% | 1300391 | 20 |
| 75 | R36, R37, R42, R43, R48, R49, R54, R55, R60, R61, R97 THRU R101, R105 THRU R107, R114, R116, R118, R119, R121 THRU R200 | RES. 1K 1/4 5% | 1300395 | 19 |
| 12 | R86, R129, R141, R146, R148, R155, R156, R157, R160, R162, R164, R165 | RES. 330 1/4W 5% | 1300295 | 18 |
| 1 | R145. | RES. 22.0 1/4W 5% | 1300271 | 17 |
| 6 | R100, R125, R127, R131, R154, R155 | RES. 150 1/4W 5% | 1300250 | 16 |
| 11 | R119, R121, R123, R134, R139, R35, R51, R57, R63, R73 | RES. 100 1/4W 5% | 1300239 | 15 |
| 2 | R133, R137 | RES. 68 1/4W 5% | 1300219 | 14 |
| 7 | R87, R88, R97, R134, R135, R144, R138 | RES. 47 1/4W 5% | 1300202 | 13 |
| 54 | D1, D2, D3, D4, D7, D9, D10, D12, D13, D15, D16, D18, D19, D21, D22, D24, D25, D27 D28, D30, D31 THRU D54 D57, D58, D61, D62, D64, D67, D68, D69, D65, D70 | DIODE FD777 | 1103041 | 12 |
| 39 | D2, D5, D8, D11, D14, D17, D20, D23, D26, D29, D55, D56, D59, D60, D63, D66, D71 THRU D93 | DIODE D662 | 1100113 | 11 |
| 96 | C41 THRU C97, C99, C100, C102, C103, C105, C106, C109, C111, C112, C114, C115 C117, C118, C120, C121, C123 C124, C126, C127 THRU C149 C151, C154, C159, C160, C161 | CAP. .22 µF 50V MONO. | 1010274-1 | 10 |
| 3 | C98, C104, C113 | CAP 6.8 µF 35V 10% S.TANT | 1009308 | 9 |
| 32 | C1 THRU C39, C150 C152, C156, | CAP .01 µF 100V 20% DISC | 1001610 | 8 |
| 1 | C158 | CAP 100 PF 100V 5% D.M. | 1000016 | 7 |
| 1 | C157 | CAP 47 PF 100V 5% D.M. | 1000011 | 6 |
| 10 | C108, C101, C119, C107, C110, C113, C116, C122, C125 | CAP 33 PF 100V 5% DM | 1000009 | 5 |
| 1 | | ETCHED CIRCUIT BOARD | 5009749 | 4 |
| REF | | MODULE ECO HISTORY | M-ECO-M8109-0-6 | 3 |
| REF | | ASSY/DRILL HOLE LAYOUT | D-ASY-M8109-0-5 | 2 |
| REF | | X-Y COORDINATE HOLE LOCATION | X-CO-M8109-0-4 | 1 |
| QTY | REF DESIGNATION | DESCRIPTION | PART NO. | ITEM NO. |

PARTS LIST

| IC TYPE | | | | | | |
|---|---|---|---|---|---|---|
| DEC 74S112 | 8 | 16 | | | | |
| | GND | +5V | | | | |
| GND AND 5V ARE USUALLY PIN 7 AND 14 RESPECTIVELY EXCEPTIONS ARE STATED ABOVE | | | ITEM NO. | AWG | FROM PT | TO PT |
| IC PIN LOCATIONS | | | JUMPER LIST | | | |

| REVISIONS | | | | | |

This drawing and specifications, herein, are the property of Digital Equipment Corporation and shall not be reproduced or copied or used in whole or in part as the basis for the manufacture or sale of items without written permission.



+3VE
74S74 -45 E27
TIGC TPBL
TIGA TI (1) L
SMCA MEM SYNC (B) L
CU2
R152 330 +5V
R151 680
74S04 E21
CU1 TIGA MEM SYNC H
74S04 E21 +3VA
74S04 E21 +3VE
74S04 E45 +3VC
TIGA STOP TI L
PHKA STOP TI L
CT2
R149 330 R150 680 +5V
74S04 E7
TIGA T4 (Ø) H
TIGA T5 (Ø) H
TMCF SEL MOS L
CC1
74S04 E7
74S65 E13
TIGA UBSDØ1 H
74S11 E3
TMCC ABORT H
CA1
74S04 E7
TIGA UBSDØØ H
TIGA UBSDØ1 H
TIGC TPB L
TIGA TI (1) L
TIGA ROM INITA L
TIGC TPB H
TI SYNC 74S74 -25 E27
T1 74S74 E19
T1A 74S74 E19
T2 74S112 E13
T2A 74S112 E17
S0 74S112 E44
S1 74S112 E44
T3 74S112 E17
T4 74S112 E24
T5 74S112 E25
T5A 74S112 E24
+3VF
+3VA
+3VC
+3VD
+3VK
+3VM
+3VN
TIGA T1 MAT H FJ2 R153 1K
TIGA T2 MAT H FT2 R138 1K
TIGA T3 MAT H CB2 R131 1K
TIGA T4 MAT H FP1 R149 1K
TIGA T5 MAT H FK1 R126 1K
TIG TPH MAT H FU1 R139 1K
TIGA T4 (1) H
74S04 E45
TIGA T5 SYNC (1) H
R127 150Ω
TIGA T5 (Ø) H
TIGA T2 (Ø) H
TIGA T1A (Ø) H
74S11 E34
TIGA ROM INITA L
TIGC TPB L
UNI DLY 74S74 E8
UBCA PAUSE H
CK1
TMCF FAST L
CB1
R154 150
TIGA CONT H
74S04 E7
CONT 74S74 E8
TIGA ROM INIT B L
74S04 E21
74S112 E22
TIGB CONT L
TIGA TI (1) B L
R155 15Ø
RACTL 74S112 E22
TIGB ROM40 UPB (1) H
TIGC TPB H
T2 (Ø) H
TIGA CONT (1) L
TMCF FAST L
TIGA ROM40 H
74S65 E12
UBCD EXT BRQ H
RACB UBSDØØ H
TIGH UBSDØ1 L
R116 330 R117 680 +5V
TIGA UBSDØØ H
TIGA SNG CY (1) H
TIGA TI (1) H
+3VF
74S65 E20
R141 330 R140 680 +5V
TIGA STOP TI L
UBCE ROM INIT H
EJ1
74S40 E14
TIGA ROM INITA L
TIGA ROM INITB L
74S00 E10
TIGA TI (1) B L
74S04 E7 +3VM
74S04 E7 +3VN
PHKA STOP T3 L
DH2
R129 330 R130 680 +5V
74S04 E4
TIGA SNGCY (1) H
TIGA T2A (1) H
TIGA CONT (1) L
RACH DIS BUST L
DA1
SSRB ENABLE T3 DLY H
FL2
74S65 E11
TIGA STOP T3 L
TIGA T1 (1) H
TIGC TPB H
TIGA CONT H
R100 150 +5V
74S112 E2
SSR DLY 74S112 E18
TIGA T1 (1) H
TIGC TPB H
+3VA
+3VN
TIGC TPB L
+3VN
+3VM
UBCA SSYN RESTART H
CD1
74S74 -45 E6
UBCA INTR RESTART H
CK2
R131 150 +5V
74S74 E5
TIGA UBSDØ1 L
RACR UBSDØ1 H
CJ1
74S04 E4
TIGA UBSDØ1 H
RACB UBSDØØ H
CL1
74S04 E4
TIGA UBSDØØ H
TIGA SØ (1) H
TIGA S1 (1) H
E43 W2 W3 W4
74S11 E47
TIGB SINGLE CYL
SNGCY 74S112 E25
TIGC TPB H
TIGA CONT H
CM1
RACB ROM40 BL
74S04 E4
TIGA ROM 40 H

REVISIONS | REV | CHANGE NO. | CHK

TIMING GENERATOR CONTROL — SLOT 15

| FIRST USED ON OPTION/MODEL | QTY. | DESCRIPTION | PART NO. | ITEM NO. |
|---|---|---|---|---|
| 1145 | | PARTS LIST | | |

UNLESS OTHERWISE SPECIFIED DIMENSION IN INCHES. TOLERANCES

| DECIMALS | ANGLES |
|---|---|
| .XXX = .005 .XX = .02 .X = .1 | ±0° 30' |

REMOVE BURRS AND BREAK SHARP CORNERS SURFACE QUALITY ✓

MATERIAL

FINISH

| | | |
|---|---|---|
| DRN. | DATE | 8/25/71 |
| CHK'D | DATE | 10/4/72 |
| ENG. | DATE | 10/4/72 |
| PROJ ENG. | DATE | 9-20-72 |
| PROD. | DATE | 10/5/72 |

NEXT HIGHER ASSY. B-DD-KB11-Ø

SCALE

SHEET 2 OF 6

digital EQUIPMENT CORPORATION MAYNARD MASSACHUSETTS

TITLE TIMING GENERATOR (TIGA)

| SIZE | CODE | NUMBER | REV. |
|---|---|---|---|
| D | CS | M8109-0-1 | R |

DIST.

DEC FORM NO DRD 102-B

SIZE CODE D CSM8109-0-1 REV R

This drawing and specifications, herein, are the property of Digital Equipment Corporation and shall not be reproduced or copied or used in whole or in part as the basis for the manufacture or sale of items without written permission.



SOURCE SYNCHRONIZER

PHASE SPLITTER/BUFFER

CRYSTAL CLOCK

R/C CLOCK (MAINTENANCE)

| MAINT. SWITCHES: REF. TO XMAA BOARD | | |
|---|---|---|
| S4 | SINGLE TIME STEPPER | |
| S3 | Ø = CRYSTAL TIMING SOURCE<br>1 = RC TIMING SOURCE | |
| S1 | S2 | MODE CONTROL |
| Ø | Ø | NO EFFECT |
| Ø | 1 | SINGLE ROM CYCLE |
| 1 | Ø | UPB STOP |
| 1 | 1 | SINGLE PULSE (USE SWØ) |

TIMING SOURCE CONTROL — SLOT 15

| FIRST USED ON OPTION/MODEL | QTY. | DESCRIPTION | PART NO. | ITEM NO. |
|---|---|---|---|---|
| 11/45 | | PARTS LIST | | |

UNLESS OTHERWISE SPECIFIED DIMENSION IN INCHES. TOLERANCES
DECIMALS: .XXX = .005, .XX = .02, .X = .1; ANGLES: ±0° 30'
REMOVE BURRS AND BREAK SHARP CORNERS SURFACE QUALITY ✓
MATERIAL —
FINISH —

| | | |
|---|---|---|
| DRN. S.W. Roberts | DATE 8/28/71 | digital EQUIPMENT CORPORATION MAYNARD, MASSACHUSETTS |
| CHK'D | DATE 9/Jan/72 | |
| ENG. | DATE 9/20/72 | |
| PROJ. ENG. | DATE 9/20/72 | TITLE: TIMING GENERATOR |
| PROD. | DATE 9/21/72 | (TIGB) |
| NEXT HIGHER ASSY. B-DD-KB11-Ø | | SIZE D CODE CS NUMBER M8IØ9-Ø-1 REV R |
| SCALE — | | |
| SHEET 3 OF 6 | | DIST. |

REVISIONS | REV | CHANGE NO. | CHK

DEC FORM NO DRD 102-B

This drawing and specifications, herein, are the property of Digital Equipment Corporation and shall not be reproduced or copied or used in whole or in part as the basis for the manufacture or sale of items without written permission.

NOTES:
1. ALL NPN TRANSISTORS ARE DEC 3009B, ALL PNP TRANSISTORS ARE DEC 4258, ALL DIODES ARE TYPE FD 777, ALL CAPACITORS ARE .22μf 50V MONLYTHIC UNLESS OTHERWISE INDICATED.

TIGB CLOCK H
TIGB CLOCK L
TIGA T1A(1)H
TIGA T1A(1)L
TIGA T2A(1)H
TIGA T2A(1)L
TIGC TPB H
TIGC TPB L
TIGC TFH
TIGC TFR H
TIGC TF L
TIGC TFR L
TIGC T1 H
TIGC T1B H
TIGC T1R H
TIGC T1BR H
TIGC T1 L
TIGC T1B L
TIGC T1R L
TIGC T1BR L
TIGC T2 H
TIGC T2B H
TIGC T2R H
TIGC T2BR H
TIGC T2 L
TIGC T2B L
TIGC T2R L
TIGC T2BR L

SLOT 15

| FIRST USED ON OPTION/MODEL | QTY. | DESCRIPTION | PART NO. | ITEM NO. |
|---|---|---|---|---|
| 11/45 | | PARTS LIST | | |

UNLESS OTHERWISE SPECIFIED DIMENSION IN INCHES. TOLERANCES
DECIMALS: .XXX = .005, .XX = .02, .X = .1 — ANGLES: ±0° 30'
REMOVE BURRS AND BREAK SHARP CORNERS SURFACE QUALITY ✓
MATERIAL —
FINISH —

| | | |
|---|---|---|
| DRN | A. Dano | DATE 2-25-72 |
| CHK'D | [illegible] | DATE 4/[illegible] |
| ENG | R.V. Hoff | DATE 4/14/72 |
| PROJ. ENG. | M.S. Varela | DATE 4/20/72 |
| PROD. | [illegible] | DATE 4-21-72 |

digital EQUIPMENT CORPORATION MAYNARD MASSACHUSETTS

TITLE: TIMING GENERATOR (TIGC)

NEXT HIGHER ASSY.: B-DD-KB11-Ø
SCALE —
SHEET 4 OF 6

| SIZE | CODE | NUMBER | REV. |
|---|---|---|---|
| D | CS | M8109-Ø-1 | R |

DIST.

| REVISIONS | REV | CHANGE NO | CHK |
|---|---|---|---|

BRUNING 40-522 15840
DEC FORM NO DRD 102-B

This drawing and specifications, herein, are the property of Digital Equipment Corporation and shall not be reproduced or copied or used in whole or in part as the basis for the manufacture or sale of items without written permission.

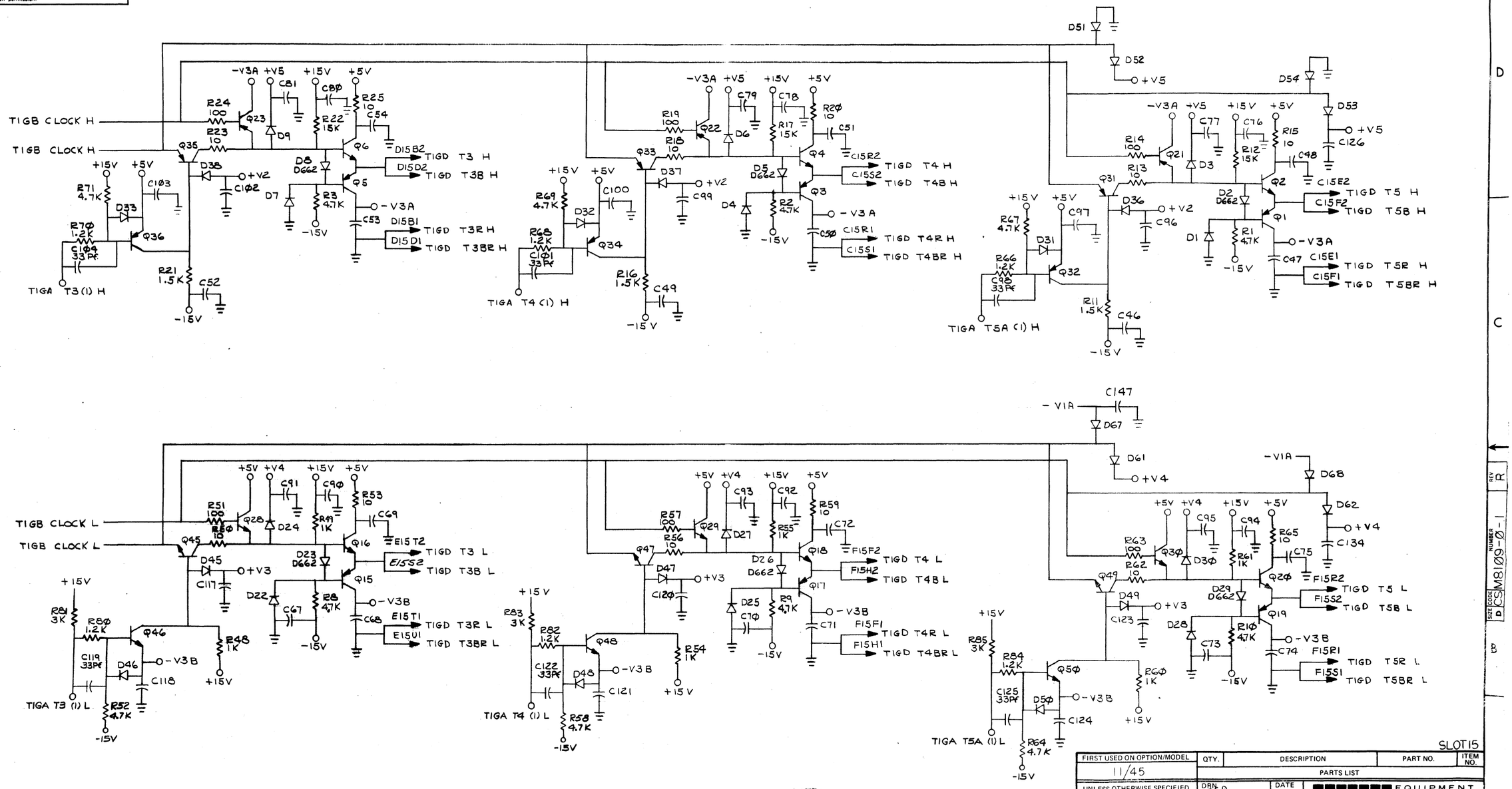


NOTE:

1. ALL NPN TRANSISTORS ARE DEC 3009B; ALL PNP TRANSISTORS ARE DEC 4258, ALL DIODES ARE TYPE FD777 ALL CAPACITORS ARE .22 μF MONLYTHIC UNLESS OTHERWISE INDICATED.

SLOT 15

| FIRST USED ON OPTION/MODEL | QTY. | DESCRIPTION | PART NO. | ITEM NO. |
|---|---|---|---|---|
| 11/45 | | PARTS LIST | | |

UNLESS OTHERWISE SPECIFIED DIMENSION IN INCHES TOLERANCES
DECIMALS: .XXX = .005, .XX = .02, .X = .1 — ANGLES: ±0° 30'
REMOVE BURRS AND BREAK SHARP CORNERS SURFACE QUALITY ✓
MATERIAL —
FINISH —

| | | |
|---|---|---|
| DRN. R. Davis | DATE 3-1-72 | digital EQUIPMENT CORPORATION MAYNARD MASSACHUSETTS |
| CHK'D P. Gagnon | DATE 4/20/72 | |
| ENG. L. Wolf | DATE 4/24/72 | |
| PROJ. ENG. D. Lynda | DATE 4/20-72 | |
| PROD. [illegible] | DATE 4-21-72 | |

TITLE: TIMING GENERATOR (TIGD)

NEXT HIGHER ASSY. B-DD-KB11-Ø
SCALE —
SHEET 5 OF 6

| SIZE | CODE | NUMBER | REV |
|---|---|---|---|
| D | CS | M8109-Ø-1 | R |

DIST.

| REV | REVISIONS | CHANGE NO | CHK |
|---|---|---|---|
| R | | | |

BRUNING 40-522 15840
DEC FORM NO DRD 102-B

This drawing and specifications, herein, are the property of Digital Equipment Corporation and shall not be reproduced or copied or used in whole or in part as the basis for the manufacture or sale of items without written permission.

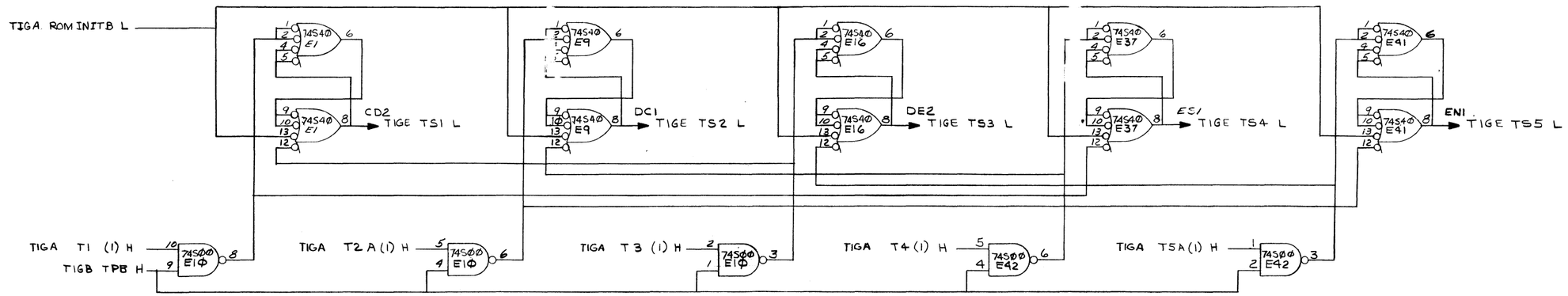


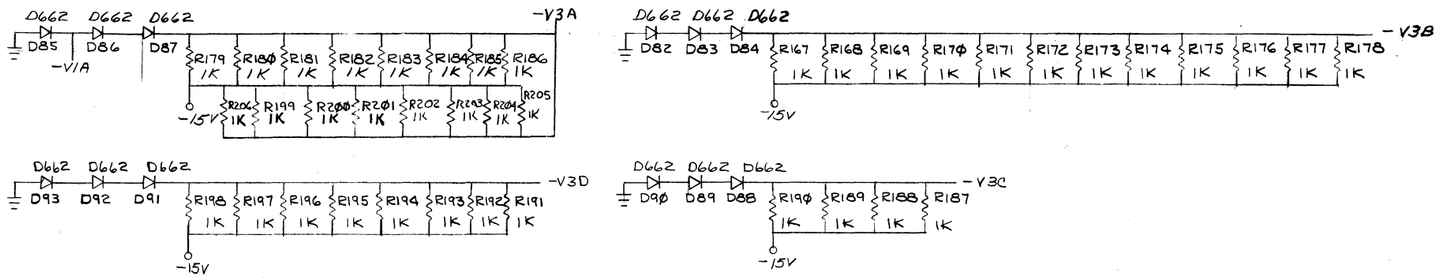


TIMING STATE DRIVERS — SLOT 15

| FIRST USED ON OPTION/MODEL | QTY. | DESCRIPTION | PART NO. | ITEM NO. |
|---|---|---|---|---|
| 11/45 | | PARTS LIST | | |

UNLESS OTHERWISE SPECIFIED DIMENSION IN INCHES. TOLERANCES

| DECIMALS | ANGLES |
|---|---|
| .XXX = .005 | ±0° 30' |
| .XX = .02 | |
| .X = .1 | |

REMOVE BURRS AND BREAK SHARP CORNERS SURFACE QUALITY ✓

MATERIAL —

FINISH —

| | | |
|---|---|---|
| DRN. L. Carberry | DATE 8-25-71 | digital EQUIPMENT CORPORATION MAYNARD MASSACHUSETTS |
| CHK'D. [illegible] | DATE 9/30/72 | |
| ENG. [illegible] | DATE 9/20/72 | |
| PROV. ENG. [illegible] | DATE 9-20-72 | |
| PROD. [illegible] | DATE 9-21-72 | |

TITLE: TIMING GENERATOR (TIGE)

NEXT HIGHER ASSY. B-DD-KB11-Ø

SCALE —

SHEET 6 OF 6

| SIZE | CODE | NUMBER | REV. |
|---|---|---|---|
| D | CS | M8109-Ø-1 | R |

DIST.

| REVISIONS | REV |
|---|---|
| CHANGE NO. | |
| CHK | |

DEC FORM NO DRD 102-B

SIZE D CODE CS NUMBER M8109-Ø-1 REV R

NOTE:
1. UNLESS OTHERWISE NOTED RESISTANCE IS IN Ω, CAPACITANCE IS IN PICOFARADS. CAPS WITHOUT VALUE NOTED ARE .01 MFD.

| | | | | |
|---|---|---|---|---|
| 1 | R24 | RESISTOR 10K, 1/4W, 5% | 1300479 | 34 |
| 1 | E3 | DEC IC 74155 | 1910656 | 33 |
| 2 | E24,E59 | DEC IC 8885 | 1910649 | 32 |
| 3 | E45,E62,E73 | DEC IC 745174 | 1910550 | 31 |
| 1 | E11 | DEC IC 745153 | 1910547 | 30 |
| 9 | E30,E56,E86 | DEC IC 745140 | 1910546 | 29 |
| 1 | E27 | DEC IC 745112 | 1910545 | 28 |
| 5 | E17,E40,E41,E54,E71 | DEC IC 74S74 | 1910544 | 27 |
| 3 | E16,E25,E28 | DEC IC 74S64 | 1910542 | 26 |
| 11 | E8, E30,E39,E48,E50,E53, E64,E65,E78,E75,E89 | DEC IC 7452Ø | 1910539 | 25 |
| 17 | E5,E14,E21,E29,E31,E34,E35, E42, E47,E49,E66,E67,E72, E76, E77,E78,E88 | DEC IC 7451 | 1910537 | 24 |
| 5 | E13,E32,E44,E51,E83 | DEC IC 74SIØ | 1910536 | 23 |
| 12 | E4,E18,E22,E26,E33,E36, E46,E57,E63,E74,E85,E90 | DEC IC 74S84 | 1910534 | 22 |
| 8 | E1,E6,E23,E43,EGØ,E79,E81,E | DEC IC 74SØØ | 1910532 | 21 |
| 1 | E2 | DEC IC 8815A | 1909713 | 20 |
| 1 | EIØ | DEC IC 380A | 1909485 | 19 |
| 1 | E7 | DEC IC 74H11 | 1909267 | 18 |
| 5 | E15,E52,E58,E7',E84 | DEC IC 74H5Ø | 1909060 | 17 |
| 7 | E12,E13,E55,E68,EG9,E83,E8 | DEC IC 74H3Ø | 1909059 | 16 |
| 12 | | EYELET | 9006732 | 15 |
| 2 | R2,R14 | RESISTOR,680Ω,1/4W,5% | 1301424 | 14 |
| 1 | R7 | RESISTOR,180Ω,1/4W,5% | 1301322 | 13 |
| 3 | R15 THRU R17 | RESISTOR, 1K, 1/4W,5% | 1303265 | 12 |
| 1 | R8 | RESISTOR, 390Ω,1/4W,5% | 1303309 | 11 |
| 2 | R1,R13 | RESISTOR, 330Ω,1/4W,5% | 1302295 | 10 |
| 1 | R21 | RESISTOR,150Ω,1/4W,5% | 1302250 | 9 |
| 4 | R4,R6,R18,R23 | RESISTOR,120Ω,1/4W,5% | 1302247 | 8 |
| 86 | C1-C8,C10-C19,C21-C7Ø, C72-C8Ø,C82-C9Ø | CAP, .01UF, 100V, 20% DISC | 1001610 | 7 |
| 6 | C92 THRU C97 | CAP, 6.8 UF, 35V, 20% | 1000067 | 6 |
| 1 | | HANDLE,MODULE | 1610711-2-0 | 5 |
| 1 | | ETCHED CIRCUIT BOARD | 5009803 | 4 |
| REF | | ECO MODULE HISTORY | 8-M805-0-1 | 3 |
| REF | | ASSY DRILLING HOLE LAYOUT | E-M-M805-0-5 | 2 |
| REF | | X-Y COORDINATE HOLE LOCATION | X-Y-CO-M805-0-4 | 1 |
| QTY | REF DESIGNATION | DESCRIPTION | PART NO | ITEM NO |

PARTS LIST

ETCH BOARD REV E

| | | | |
|---|---|---|---|
| DEC 745174 | 8 | 16 | |
| DEC 74155 | 8 | 16 | |
| DEC 74153 | 8 | 16 | |
| DEC 7452 | 8 | 16 | |
| DEC 3404 | - | 6 | |
| IC TYPE | GND | +5V | |

GND AND +5V USUALLY PIN 7 AND 16 RESPECTIVELY - EXCEPTIONS ARE STATED ABOVE

IC PIN LOCATIONS

| ITEM NO | WIRE | FROM PT | TO PT |
|---|---|---|---|

JUMPER LIST

AA2,AV1,BA2,BV1,CA2,CV1, DA2,DV1,EA2,EV1,FA2,FV1 — +5V

AC2,AN2,AH1,AT1,BC2,BN2, BH1,BT1,CC2,CN2,CH1,CT1, DC2,DN2,DH1,DT1,EC2,EN2, EH1,ET1,FC2,FN2,FH1,FT1 — GND

C92 THRU C97: + 6.8 µF, − .01 µF

C1-C8,C10-C19,C21-C7Ø, C72-C8Ø,C82-C9Ø

| REV | DESCRIPTION | DATE | APPROVED |
|---|---|---|---|
| A | ECO M805-0-1 | 11/74 | |
| B | ECO M805-0-2 | 1/75 | |

DEC NO | EIA NO | DEC NO | EIA NO

SEMICONDUCTOR CONVERSION CHART

NEXT HIGHER ASSY E A - 785-0

SCALE 2/1 SHEET 1 OF 2

EQUIPMENT CORPORATION

TITLE: TRAP & MISC. CONTROL

CATEGORY E | S DIST | NUMBER M805-0-1 | REV J

This drawing and specifications, herein, are the property of Digital Equipment Corporation and shall not be reproduced or copied or used in whole or in part as the basis for the manufacture or sale of items without written permission



TMCE SET CONF L

UBCF S/INST L (EJ2) → 74S00 E79 pin 1
TMCA CONF (1) L → 74S00 E79 pin 2
74S00 E79 pin 3 → D CONF (74S74) pin 12
CLK → TMCA CONF (1) H
TMCE CLK CONF H → E37 C pin 11
CEL → TMCA CONF (Ø) H

UBCH STRB FTN H (DS1) → 74S20 E53 pin 1
UBCF CONT (1) H (DF1) → 74S20 E53 pin 2
74S20 E53 pin 6 → 74S11 E77 pin 11
UBCE START INIT L (FB2) → 74S11 E77 pin 9
UBCE DC LOB L (FC1) → 74S11 E77 pin 10
74S11 E77 pin 8 → TMCA CLR CONF L

SSRD MEM MGMT TRAP L (FE1) → 74H50 E52 pin 4
TMCE PAUSES H → 74H50 E52 pin 5
TMCA SEGTF L → 74H50 E52 pin 2
TMCE PAUSES L → 74H50 E52 pin 3
74H50 E52 pin 6 → 74S174 E73 pin 14 (D5)

TMCD SLYEL (1) H → 74S174 E73 pin 13 (D4)
UBCE PDNF (1) H (FB1) → 74S174 E73 pin 11 (D3)
PDRD PIR15 (1) H (EV2) → 74S174 E73 pin 6 (D2)
FRHH FP EXC TRAP L (ET2) → 74S04 E85 pin 5; R13 330Ø, R14 680Ø, +5V
74S04 E85 pin 6 → 74S174 E73 pin 4 (D1)
TMCA BRQ CLR L → 74S174 E73 pin 2 (D0)

UBCE PF CLR (1) L (FK1) → 74S11 E77 pin 1
TMCC PRIORITY CLR L → 74S11 E77 pin 2
UBCE INT BUS INIT L (FD2) → 74S11 E77 pin 13
74S11 E77 pin 12 → 74S174 E73 pin 1 (CLR)

74S174 E73 pin 9 (CLK) → TMCE BRQ CLK H

74S174 E73: D5 R5, D4 R4, D3 R3, D2 R2, D1 R1, D0 R0, CLR, CLK

TMCA SEGTF L → 74S04 E74 pin 11 → pin 10
74S04 E74 pin 9 → pin 8
74S04 E74 pin 5 → pin 6
74S04 E74 pin 3 → pin 4
74S04 E74 pin 13 → pin 12

74S04 E74 pin 10 → 74S11 E78 pin 3
74S04 E74 pin 8 → 74S11 E76 pin 2
74S04 E74 pin 6 → 74S11 E76 pin 4
74S04 E74 pin 4 → 74S11 E76 pin 9
74S04 E74 pin 12 → 74S11 E77 pin 3

UBCB ACKN B H (DR1) → 74S00 E79 pin 12
74S00 E79 pin 11 (EH2) → TMCA SEG ACKN L

74S11 E78 pin 8 → 74S00 E93 pin 13
TMCA HONOR SLYL → 74S04 E85 pin 9
74S04 E85 pin 8 → TMCA HONOR SLY H
74S00 E93 pin 11 → 74S10 E51 pin 9
74S10 E51 pin 8 (DS2) → TMCA HONOR PWRF L
74S20 E75 pin 6 → TMCA HONOR FPTRAP L
TMCA SEG +CON L → 74S20 E75 pin 9
74S20 E75 pin 8 → TMCA HONOR PIR7 L
TMCB BLOCK LEV 7 L → 74S11 E76 pin 9
TMCA ABOVE BR7 L → 74S11 E77 pin 3

74S11 E78 pin 10 → 74S10 E83 pin 9
74S10 E83 pin 8 (FK2) → TMCA HONOR BR7 L

BUSA BR7 L (AT2) → 380 E10 pin 7
BUSA BR6 L (AV2) → 380 E10 pin 8
BUSA BR5 L (BC1) → 380 E10 pin 12
380 E10 pin 6 → 74S174 E62 pin 14 (D5)
PDRD PIR14 (1) H (EK2) → 74S174 E62 pin 13 (D4)
PDRD PIR13 (1) H (EK1) → 74S174 E62 pin 6 (D2)
PDRD PIR12 (1) H (EL1) → 74S174 E62 pin 3 (D0)

74S174 E62: D5 R5, D4 R4, D3 R3, D2 R2, D1 R1, D0 R0, CLR, CLK

74S174 E62 pin 9 (CLK) → TMCE BRQ CLK H

74S04 E63 pin 13 → pin 12
74S04 E63 pin 11 → pin 10
74S04 E63 pin 9 → pin 8
74S04 E63 pin 5 → pin 6
74S04 E63 pin 3 → pin 4
74S04 E63 pin 1 → pin 2

74S11 E66 pin 2 → pin 12
74S11 E66 pin 4 → pin 6
74S11 E67 pin 2 → pin 12
74S11 E67 pin 3 → pin 6
74S11 E67 pin 11 → pin 8
74S11 E66 pin 9 → pin 8

TMCB BLOCK LEV 6 L
TMCB BLOCK LEV 5 L
PDRD PSØ7(Ø)H

74S11 E78 pin 11 → 74S00 E93 pin 10
74S00 E93 pin 8 → TMCA HONOR SEGT H

74S10 E83 pin 10 → 74S20 E65 pin 5
74S20 E65 pin 6 → TMCA HONOR PIR6 L
74S20 E65 pin 8 (EM2) → TMCA HONOR BR6 L
TMCA INH BELOW BR6 L → 74S20 E64 pin 1
74S20 E64 pin 6 → TMCA HONOR PIR5 L
74S20 E64 pin 8 (EL2) → TMCA HONOR BR5 L
74S20 E53 pin 8 → TMCA HONOR PIR 4 L
TMCA BLOCK BR4 L → 74S20 E53 pin 1
TMCA INH BELOW PIR4 L → 74S20 E53 pin 2

| ORDER OF SERVICE | VECTOR |
|---|---|
| 1 CONSOLE FLAG | — |
| 2 SEG MEM MANAGEMENT TRAP | 250 |
| 3 STACK LIMIT YELLOW | 4 |
| 4 POWER FAIL | 24 |
| 5 FP EXCEPTION TRAP | 244 |

| CP LEVEL 7 | | CP LEVEL 3 | |
|---|---|---|---|
| 6 PIRQ 7 (PIR15)<br>7 BUS REQUEST 7 | 240<br>INTR | 14 PIRQ3 (PIR11) | 240 |
| CP LEVEL 6 | | CP LEVEL 2 | |
| 8 PIRQ 6 (PIR14)<br>9 BUS REQUEST 6 | 240<br>INTR | 15 PIRQ2 (PIR10) | 240 |
| CP LEVEL 5 | | CP LEVEL 1 | |
| 10 PIRQ 5 (PIR13)<br>11 BUS REQUEST 5 | 240<br>INTR | 16 PIRQ1 (PIR09) | 240 |
| CP LEVEL 4 | | CP LEVEL Ø | |
| 12 PIRQ 4 (PIR12)<br>13 BUS REQUEST 4 | 240<br>INTR | 17 TBIT(PS04) AND NOT RTTS<br>RTT NOT LOCKED OUT BY PROC STATUS LEVELS BUT SERVICED LAST | 14 |

REVISIONS: REV / CHANGE NO / CHK

PRIORITY ARBITRATION SLOT11

| FIRST USED ON OPTION/MODEL | QTY. | DESCRIPTION | PART NO. | ITEM NO |
|---|---|---|---|---|
| 11/45 | | PARTS LIST | | |

UNLESS OTHERWISE SPECIFIED DIMENSION IN INCHES. TOLERANCES
DECIMALS: .XXX ± .005, .XX ± .02, .X ± .1 — ANGLES: ±0° 30'
REMOVE BURRS AND BREAK SHARP CORNERS SURFACE QUALITY ✓
MATERIAL
FINISH

DRN. DATE 5/72
CHK'D. DATE
ENG. DATE 5-72
PROJ. ENG. DATE 5/1/72
PROD. DATE 5/1/72

EQUIPMENT CORPORATION MAYNARD MASSACHUSETTS

TITLE: TRAP & MISC CONTROL (TMCA)

NEXT HIGHER ASSY. B-DD-11/45-Ø
SCALE
SHEET 2 OF 7

SIZE D CODE CS NUMBER M8105-Ø-1 REV J
DIST

DEC 1070-B

This drawing and specifications, herein, are the property of Digital Equipment Corporation and shall not be reproduced or copied or used in whole or in part as the basis for the manufacture or sale of items without written permission.

TMCA ABOVE BR7 L
PDRD PSØ7 (Ø) H
TMCA BLOCK BR4 L
74S2Ø E7Ø
EF2
TMCB HONOR BR4 L

TMCB BLOCK LEV 3 L
TMCB BLOCK LEV 2 L
TMCA INH BELOW BR6 L
TMCA INH BELOW PIR4 L
74S11 E49
74S2Ø E5Ø
TMCB HONOR PIR 3 L
74S2Ø E49
TMCB HONOR PIR2 L
74S2Ø E48
TMCB HONOR PIR1 L
PDRD PRIORITY = Ø H
DK2

PDRD PSØ7 (1) H
PDRD PSØ6 (1) H
PDRD PSØ5 (1) H
74S1Ø E51
TMCB BLOCK LEV 7 L
74S2Ø E2Ø
TMCB BLOCK LEV 6 L
74H5Ø E61
TMCB BLOCK LEV 5 L
74H5Ø E61
TMCB BLOCK LEV 3 L

PDRD PSØ7 (1) L
PDRD PSØ6 (1) L
74S11 E42
TMBC BLOCK LEV 2 L

BUSA BR4 L
PDRD PIRI1 (1) H
PDRD PIRIØ (1) H
PDRD PIRØ9 (1) H
PDRD PSØ4 (1) H
IRCD RTT L
74S11 E42
74S/74 E45
CLR CLK
TMCA BRQ CLR L
TMCE BRQ CLK H
R15 1K
TMCB PSØ4 MAT H

TMCA SEG +CON L
TMCA HONOR SLY L
TMCA HONOR PWRF L
TMCA HONOR FPTRAP L
TMCA HONOR PIR7 L
TMCA HONOR ER7 L
TMCA HONOR PIR6 L
74H3Ø E8Ø
74S04 E57

TMCA HONOR BR6 L
TMCA HONOR PIR5 L
TMCA HONOR ER5 L
TMCA HONOR PIR4 L
TMCB HONOR ER4 L
TMCB HONOR PIR3 L
TMCB HONOR PIR2 L
TMCB HONOR PIR1 L
74H3Ø E6Ø
74S04 E57

74S11 E47
TMCB BRQ TRUE L
AK1
74S2Ø E5Ø
DK1
TMCB HONOR T L
74S1Ø E51
CR1
TMCE BRQ TRUE H

74S00 E79
74S00 E79
EDI
TMCB BRQ *-(T+CONF) L
TMCA CONF(Ø) H

TMCC SEG ABORTED (1) H
TMCC AERF (1) H
74H5Ø E58
EE2
TMCB SEGT L
TMCA HONOR SEGT H
TMCC SERF (1) H
74H5Ø E58
EE1
TMCB PWRF L
TMCB HONOR PWRF H
TMCA HONOR PWRF L
74S04 E57
TMCC BLOCK STROBE (1) H
8883 E59
EE2
TMCB TRAP INH L
74S00 E62
EM1
TMCB PIRQ L

TMCD +3V H
UBCD EXT BRQ L
BAI
74S00 E62
DR2
TMCB FPTRAP L
TMCE INTR PAUSE H
TMCE BRQ TRUE H
TMCC TSE CLK H
74S11 E42
74S/74 E17
TMCA HONOR FPTRAP L
74S04 E57
TMCB HONOR FPTRAP H
74S1Ø E56
EC1
TMCB FP ACKN L
74S00 E62
DN1
TMCB TOK L
UBCE INIT H
UBCB ACKN B H
8883 E59
BN1
TMCB CLR INTRFL
TMCB HONOR T L
74S04 E57
UBCB ACKN B H
(DR1)

TMCA HONOR PIR7 L
TMCA HONOR PIR6 L
TMCA HONOR PIR5 L
TMCA HONOR PIR4 L
TMCB HONOR PIR3 L
TMCB HONOR PIR2 L
TMCB HONOR PIR1 L
74H3Ø E69

TMCB PIRQ L
TMCA HONOR PWRF L
TMCC AERF(1) L
TMCB TOK L
UBCB PARITY ERR L
TMCA HONOR SLY L
TMCA HONOR FP TRAP L
TMCB SEGT L
74H3Ø E55
DD1

UECE PUPF (Ø) L
FN1
74S04 E85
74S5Ø E84
FV2
TMCB PF(Ø) * (SF + TF) H
74H5Ø E84
FP2
TMCB PF(Ø) * (SF+-TF) H
TMCC SERF(1) L

PRIORITY ARBITRATION; TRAP VECTORS SLOT1

| FIRST USED ON OPTION MODEL | QTY. | DESCRIPTION | PART NO. | ITEM NO. |
|---|---|---|---|---|
| 11/45 | | PARTS LIST | | |

UNLESS OTHERWISE SPECIFIED DIMENSION IN INCHES TOLERANCES
DECIMALS .XXX ± .005 .XX ± .02 .X ± .1
ANGLES ± 0° 30'
REMOVE BURRS AND BREAK SHARP CORNERS SURFACE QUALITY ✓
MATERIAL —
FINISH —

DRN. — DATE
CHK'D — DATE
ENG — DATE 1/4/72
PROJ ENG — DATE 2/1/72
PROD — DATE 2/14/72

EQUIPMENT CORPORATION MAYNARD MASSACHUSETTS

TITLE: TRAP & MISC. CONTROL
TMCB

NEXT HIGHER ASSY. B-DD-11/45-Ø
SCALE —
SHEET 3 OF 7

SIZE D CODE CS NUMBER M81Ø5-Ø-1 REV J

REVISIONS | REV | CHANGE NO | CHK

DEC 1 0040 NO 1103-B

This drawing and specifications, herein, are the property of Digital Equipment Corporation and shall not be reproduced or copied or used in whole or in part as the basis for the manufacture or sale of items without written permission



TMCC ODD ADRS ERR L
UBCB PARITY ERR L
UBCB TIME OUT (1) L
74S11 E29
TMCC BUS ERROR L

+5V
R24 10K 1/4W 5%

SSRC RTIC ABORT FLG L (CH2)
TMCD SL RED L
74S20 E38
EJ1
TMCC ABORT H

74S04 E36
TMCC +3V H
74S04 E26

UBCB PE ABORT L
TMCE PAUSES L
74S00 E87
FF1
74S08 E38
DP1
TMCC ABORT CLR L

TMCC TS3 CLK H

TMCD SL RED L (CH2)
SSRC RTIC ABORT FLG L
TMCC BUS ERROR L
74S10 E44

TMCC CLK FLAGS H (CH2)
RACB UBSD01 H
TMCC KERNEL RG(1) H
74S20 E39
TMCB HONOR PWRF H
8885 E24
TMCC SERF MAT H
TMCC SERF (1) H
TMCC SERF (Ø) H
R17 1K DE2
UBCB ACKN B H (DR1)
TMCE CLK CONF H
74S74 E37 (74S74)
74S10 E19
AV2
TMCC A? C[illegible] L

TMCC BCTØ2 B L
TMCC +3V H
TMCA HONOR SLV H
UBCB ACKN B H (DR1)
74S11 E78
74S11 E29
TMCC STROBE INH L

RACC UBCTØ2 H (AE2)
74S04 E26

UBCE INIT L (BS1)
74S11 E29

TMCC TS3 CLK H
RACC UBCTØ1 h (AF2)
RACC UBCTØØ H (AK2)
74S20 E37

TIGD T4 H CJ2
R18 120Ω
R19 +5V
TMCC +3V H

GRAC GRAB L
BUI
UBCC DATI L CF2
74S04 E26
74S00 E23
RACB UBAXØØ H CD1
RACC UBCTØ2 H (AE2)
RACC UBCTØØ H (AK2)
PDRD PS14 (Ø) H (CH2)
74S20 E05
74S64 E25
TMCE BUST H
TMCE PAUSES H
GRAC GDG L CB2
UBCE INIT L (BS1)
74S112 E27
TMCC KERNAL RG (1) H
TMCC KERNAL RG (Ø) H

RACC UBCT Ø1 H (AF2)
74S04 E18
TMCC BCTØ1 B L

TMCC +3V H
TIGB TF L BS2
R3 +5V
R4 120Ω
74S112 E27
BT2
TMCC FREE CLK (1) H
CB1
TMCC FREE CLK (Ø) H

IRCD BYIN H
BFI
74S04 E26
DAPB BAMXØØ H
BE2
RACC UBSC02 H EPI
UBSC01 H ERI
74S00 E23
74S04 E26
74S00 E23
74S64 E25
BE1
TMCC ODD ADRS ERR L
UBSCØØ H
74S04 E26
TMCC BSC01 B L
TMCC +3V H
IRCC SM357 H DC1
SSRC RTIC ABORT FLG L (CH2)
74S74 E40
TMCC SEG ABORTED (1) H
UBCF CNSL ACT (Ø) H (DJ2)
74S00 E87
UBCE INIT L (BS1)
74S11 E31
TMCC INIT +ACKN L
UBCB [illegible]
74S04 E85

TMCC SERF (1) H
TMCC ABORT CLR L
74S04 E36
74S00 E18
TMCC PRIORITY CLR L
DE1
TMCD SLRED L
TMCA HONOR PWRF L

TIGE TS3 L CS2
R9 +5V
R10
74S09 E36
TMCC TS3 CLK H
TMCC TS3 CLKA H

TIGE TS2 L CK1
R11 R12 +5V
74S09 E36
TMCC TS2 CLK H

TMCC CLK FLAGS H
TMCC TSC CLK H
UBCF CNSL FLG (Ø) H (DJ2)
74S11 E31
TMCC KERNEL RG (Ø) H
RACB UBSD01 H (CH2)
74S20 E39
TMCC BUS ERROR
SSRC RTIC ABORT FLG L (CH2)
74S00 E23
TMCC +3V H
74S74 E41
R16 1K DC1
TMCC AERF MAT H
TMCC SERF (1) H
TMCC AERF (Ø) H
TMCB CLR INTRF L

R12, R19, R3, R9, R10, R11 ARE SPARE'S
NO VALUE IS ASSIGNED.

OF 3 SERF; ODD ADDRESS SLOT 11

| FIRST USED ON OPTION/MODEL | QTY. | DESCRIPTION | PART NO. | ITEM NO |
|---|---|---|---|---|
| 11/45 | | PARTS LIST | | |

UNLESS OTHERWISE SPECIFIED DIMENSION IN INCHES TOLERANCES
DECIMALS .XXX ± .005 .XX ± .02 .X ± .1
ANGLES ± 0° 30'
REMOVE BURR AND BREAK SHARP CORNERS SURFACE QUALITY ✓
MATERIAL
FINISH

DBN [illegible] DATE 6-23-72
CHK'D [illegible] DATE 7/8/72
ENG [illegible] DATE 6/72
PROJ ENG [illegible] DATE [illegible]
PROD [illegible] DATE 7/5/72

digital EQUIPMENT CORPORATION MAYNARD MASSACHUSETTS

TITLE
TRAP & MSC CONTROL
(TMCC)

NEXT HIGHER ASSY
B-DJ-11/45-0

SIZE D CODE CS NUMBER M8105-0-1 REV J
SCALE
SHEET 4 OF 7
DIST

| REVISIONS | REV |
|---|---|
| CHANGE NO | |
| CHK | |

DEC FORM NO DRJ 102-B

FACT CODE D CS M8105-0-1 REV J

This drawing and specifications, herein, are the property of Digital Equipment Corporation and shall not be reproduced or copied or used in whole or in part as the basis for the manufacture or sale of items without written permission



SAPJ PA17 H
SAPJ PA16 H
SAPJ PA15 H
SAPJ PA14 H
SAPJ PA13 H
SAPJ PA12 H
SAPJ PA11 H
SAPJ PA10 H
74H30 E82

UBCA CPBSY B H
SAPJ PA09 H
SAPJ PA08 H
SAPJ PA07 H
SAPJ PA06 H
TMCD BAMX 05 BH
DAPB BAMX 04 H
DAPB BAMX 03 H
74H30 E12

8885 E24 → CK2 → TMCD INTERNAL ADRS H

INTERNAL ADRS MUX 74155 E3
STBI STBØ
IF3 IF2 IF1 IFØ
F3 F2 F1 FØ → TMCD SW ADRS L
SI SØ

SAPJ PA09 H
SAPJ PA08 H
SAPJ PA06 H
74H30 E13
74S04 E4

TMCD BAMX 05 BH
DAPB BAMX 04 H
DAPB BAMX 03 H

DAPB BAMX 02 H → AN1
DAPB BAMX 01 H → AP1

74S00 E1 → TMCD SW ADRS B L → AJ2
FS2 → SSRK KT11C FAST(1) L

SAPJ PA07 H → 74S04 E18

TMCD INTERNAL ADRS H
UBCB MSYN SET H → ACI
74S08 E9

TMCF GET OFF H → 74S04 E18 → TMCD GET OFF L

74H30 E82 → 74S15 E15

TMCE C1 H
TMCD +3V H → 74S11 E14

UBCA CPBSY B H → AU1 → 74S00 E6

REGISTER ADDRESSES

| | |
|---|---|
| PROC STATUS | 777776 |
| STACK LIMIT | 777775 |
| PROG INT | 777772 |
| PROG BREAK | 777770 |
| SWITCH REGISTER | 777570 (IN) |
| DISPLAY REGISTER | 777570 (OUT) |

74S04 E4 → AP2 → TMCD SL ADRS H
74S04 E4 → AS2 → TMCD PS ADRS H
74S10 E19
74S04 E4 → AR1 → TMCD PB ADRS H
74S00 E6
74S04 E4 → AR2 → TMCD PIE ADRS H

74H11 E7 → AQ1 → TMCD DMX SØ H
74H11 E7 → AB2 → TMCD DMX SI H

UBCB MYSN SET H → AC1
74S04 E18 → 74S11 E5 → AS1 → TMCD HI BYTE EN H
74S11 E5 → AD2 → TMCD LO BYTE EN H

74S04 E18 → TMCD +3V H

TMCD YEL ZONE H
TMCC KERNEL R6 (1) H
RACB UBSDØ1 H
74S20 E8
74S74 E17
PDEC STACK LIMIT H
TIGC T2 L → ADI
74S00 E6
R5
R6 120Ω
+5V
UBCE INIT H → (CJ11) → 8885 E24
TMCC SERF (1) H
→ TMCD SL YEL (1) H

+5V
R7 180Ω
R8 390Ω
TIGE TS5 L
TMCD SW ADRS BL
TMCE PAUSES L
2615 E2 → AE1 → TMCD CLKLE H

TMCC SERF (1) H
TMCC BLOCK STROBE (1) H
74S00 E6
+5V
R20
R21 150Ω
UBCB ABORT ACKN L → BM1
TIGD T5 H → BB1
TMCC KERNEL R6 (1) H
74S11 E14
TMCD INTERNAL ADRS H
PDEC STACK LIMIT H → BM2
74S74 E16 → DE1 → TMCD SL REDL
PDEC RED ZONE H → BP1

DAPC BAMX Ø7 H → AL2
DAPC BAMX Ø6 H → AH2
74S11 E14
74S04 E18 → TMCD YEL ZONE H

DAPB BAMX Ø5 H → BM1
74S11 E5 → TMCD BAMX Ø5 BH
TMCD +3V H

INTERNAL ADRS MUX

| S1 | SØ | 1F | F |
|---|---|---|---|
| L | L | PB | 3W |
| L | H | PIR | |
| H | L | SL | |
| H | H | PS | |

NOTE: R5 AND R20 ARE SPARE NO VALUE IS ASSIGNED

INTERNAL REG DECODES; STACK LIMIT SLOT11

| FIRST USED ON OPTION/MODEL | QTY. | DESCRIPTION | PART NO. | ITEM NO. |
|---|---|---|---|---|
| 11/45 | | PARTS LIST | | |

UNLESS OTHERWISE SPECIFIED DIMENSION IN INCHES TOLERANCES
DECIMALS .XXX ± .005 .XX ± .02 .X ± .1 ANGLES ± 0° 30'
REMOVE BURRS AND BREAK SHARP CORNERS SURFACE QUALITY ✓
MATERIAL —
FINISH —

DRN. — DATE 5/11
CHK'D. — DATE 5/11/72
ENG. — DATE 5/11/72
PROJ ENG. — DATE 5/11/72
PROD — DATE 5/11/72
NEXT HIGHER ASSY. B-CD-11/45-Ø
SCALE —
SHEET 5 OF 7

EQUIPMENT CORPORATION MAYNARD MASSACHUSETTS

TITLE: TRAP & MSC CONTROL (TMCD)

SIZE D | CODE CS | NUMBER M8105-Ø-1 | REV —
DIST.

REVISIONS: REV | CHANGE NO | CHK

This drawing and specifications, herein, are the property of Digital Equipment Corporation and shall not be reproduced or copied or used in whole or in part as the basis for the manufacture or sale of items without written permission.

RACC UMSCØ2 H (ER2) 13
RACC UMSCØ1 H ES1 1
RACC UMSCØØ L CT2 2
74S11 E35 12 → TMCE BRQ STROBE H

16 11 9 74S11 E72 8 → TMCE CLK CONF H

TMCC STROBE INH L 2
TMCC TS3 CLKA H 13
74S11 E34 12 → TMCE BRQ CLK H

RACC UBCTØ2 H (AE2) 1
RACC UBCTØ1 H (AE1) 13
RACC UBCTØØ H (AE0) 2
74S10 E19 12

TMCE PAUSES H 1
TMCC BUS ERROR L 3
UBCB PARITY ERR L DB2 4
TMCD SL RED L 5
74S10 E44 6
74S04 E43 3
74S00 E43 6
74S00 E43 9
TMCC TS3 CLKA H 10
CV2 → TMCE BEND H
CU1 → TMCE BEND CLR L

TMCE MSCØ1 B L 3
RACC UMSCØØ L DT2 5
74S11 E35 6 → CL2 → TMCE SET PRIORITY H

74S04 E46 1 → 2 DB2 → TMCE BEND ERR L

RACC UMSCØ2 H ER2 11
IRACH BUST H CT2 10
RACC UMSCØØ H DU1 9
74S11 E34 8
DU2 → TMCE BUST H

9 12 13 74S140 E38 8 DL1 → TMCE BUST OUT L

TIGD T3 L AF1
R22 5
R23 120Ω 4
74S00 E1 6
+5V
2 74S00 E1 3
TIGE TS5 L (AM2) 1

TMCE MSCØ2 B L 11 9 10
74S11 E35 8 CS1 → TMCE FLOATING ATTN H

RACC UMSCØ1 H (ES1) 5
74S04 E33 6 → TMCE MSCØ1 B L

IRACH BUST H → CT2
DU2 → TMCE BUST H

RACC UMSCØ2 H (ER2) 13
74S04 E33 12 → TMCE MSCØ2 B L

3 5 6 4 74S11 E34 6
TMCC TS3 CLKA H
PDRD PS14 (Ø) H (CP2) 1 2 13 74S10 E32 12
10 11 9 74S11 E21 8 → TMCE SET CONF L

UBCB PARITY ERR SET L BU2
UBCF CNSL RESET L CF1

MSC + BCT DECODE

RACC UBSCØ2 H (EPI) 13
TMCC BSCØ1 B L 11 9
74S11 E31 8 ALI → TMCE FC H

RACC UBSCØ1 H (ERI) 9 10
74S10 E32 8 CMI → TMCE KERNEL DATI L

RACC UBSCØØ H (ENI) 3
74S04 E33 4 → TMCE BSCØØ B L

TMCE BSCØ2 B L

RACC UBSCØ2 H (EPI) 11
74S04 E33 10

15 STBI STBØ 1
TMCD +3V H 13
IRCC OCLASS H BEI 12
11
FRMJ FP CI H BE2 10
IRCD BYIN H (BF1) 3
IRCB PCLASS H (BF2) 4
5
6
DI BUS COND MUX
CI
BI
AI
DØ
CØ
BØ
AØ
SI SØ
E11 74S153
F1 9 BB2 → TMCE CI H
FØ 7 BD1 → TMCE CØ H

| UBSC | Ø1 | ØØ |
|---|---|---|
| | L | L FP |
| | L | H DATO |
| | H | L ESOP1 |
| | H | H BSOP2 |

2 14
RACC UBSCØ1 H (ERI)
RACC UBSCØØ H (ENI)

IRCC OCLASS H (BF1) 5 3
RACC UBSC Ø2 H (EPI) 4
74S11 E72 6 CP1 → TMCE DATO BUSOP H

2 13 1 74S11 E72 12 FL1 → TMCE BSOP2 H

1 74S04 E22 2 → TMCE +3V H

RACB UBSDØØ H FE2
RACB UBSDØ1 H CM2
3 4 5 74S11 E21 6 CD2 → TMCE BUS LONG PAUSE H

3 74S04 E22 4
13 1 2 74S11 E21 12 CC1 → TMCE INTR PAUSE H

13 74S04 E22 12 FL2 → TMCE INTR PAUSE L

9 74S04 E22 8 → TMCE PAUSES H

4 5 3 74S10 E32 6 CN1 → TMCE INTR CLR L
TMCC TS2 CLK H

11 74S04 E22 10 CE2 → TMCE PAUSES B H

TMCE PAUSES L

5 74S04 E22 6 CB2 → TMCE PAUSES B L

BUS DELAY DECODE

NOTE: R22 IS A SPARE NO VALUE IS ASSIGNED.

*E34 PIN 8 NOT USED

MSC, BCT, BSC DECODE SLOT11

| FIRST USED ON OPTION/MODEL | QTY. | DESCRIPTION | PART NO. | ITEM NO. |
|---|---|---|---|---|
| 11/45 | | PARTS LIST | | |

UNLESS OTHERWISE SPECIFIED DIMENSION IN INCHES TOLERANCES
DECIMALS .XXX ± .005 .XX ± .02 .X ± .1 ANGLES ± 0° 30'
REMOVE BURRS AND BREAK SHARP CORNERS SURFACE QUALITY ✓
MATERIAL
FINISH

DRN. S.W.R-Lutz DATE 8/28/71
CHKD DATE
ENG DATE
PROJ. ENG. DATE
PROD DATE 3/5/72

Digital EQUIPMENT CORPORATION MAYNARD MASSACHUSETTS

TITLE
TRAP & MSC CONTROL
(TMCE)

NEXT HIGHER ASSY -11/45-Ø
SCALE -
SHEET 6 OF 7

| SIZE | CODE | NUMBER | REV |
|---|---|---|---|
| D | CS | M81Ø5-Ø-1 | J |

DIST

| REVISIONS | REV | CHANGE NO | CHK |
|---|---|---|---|
| | | | |

This drawing and specifications, herein, are the property of Digital Equipment Corporation and shall not be reproduced or copied or used in whole or in part as the basis for the manufacture or sale of items without written permission.

TMCD +3V H

74S74 E40 — FR2 → TMCF DDC ATTN (1) H

TMCC TS3 CLK H

(BS1) → UBCE INIT L

UBCF DDC STOP L (FR1) → 74S04 E85

RACB UIB5ØØ H (FD1)
TMCF IBSØ1 B L
TMCA CONF (1) H
→ 74S140 E86

TMCE INTR PAUSE L
→ 74S11 E88 → 74S00 E87 (FS2) → TMCF SEL INT L

SSRL KTIIC FAST (1) L (FS2)
TMCD SW ADRS L
TMCF IBSØØ B L
TMCF FP READ L
→ 74S20 E87 → 74S04 E90 → 74S10 E83 (FP1) → TMCF SELMEM L

+5V
R1 330
R2 680

SMCF MEM L (FT2) → 74S04 E90 → FS1 → TMCF MEM H

→ 74S11 E88 → FB2 → TMCF FAST L

TMCF IBSØØ B L
TMCF IBSØ1 B L
→ 74S11 E88 → 74S00 E87 (FM2) → TMCF GET OFF H

TMCC BCTØ2 B L
TMCC BCTØ1 B L
RACC UBCTØØ H (AK2)
→ 74S140 E86 → FJ1 → TMCF FP READ L

→ 74S10 E83 → FM1 → TMCF READ SW L

RACB UIBSØ1 H (FH2) → 74S04 E90 → TMCF IBSØ1 B L

RACB UIBSØØ H (FD1) → 74S04 E90 → TMCF IBSØØ B L

TMCA CONF (1) L
TMCE PAUSES L
→ 74H11 E7 → AB1 → TMCF IND RUN H

TMCC ABORT CLR L

74S74 E54 (IND ADRS ERR)
BV2 H

UBCF CNSL ACT (1) H → 74S04 E85 → FD1 → TMCF IND ADRS ERR H

TMCC INIT + ACKN L

REVISIONS

| REV | CHANGE NO | CHK |
|---|---|---|

BRMX SELECTION; FP READ SLOT 11

| FIRST USED ON OPTION/MODEL | QTY. | DESCRIPTION | PART NO. | ITEM NO |
|---|---|---|---|---|
| 11/45 | | PARTS LIST | | |

UNLESS OTHERWISE SPECIFIED DIMENSION IN INCHES
TOLERANCES
DECIMALS .XXX = .005 .XX = .02 .X = .1
ANGLES ±0° 30'
REMOVE BURRS AND BREAK SHARP CORNERS SURFACE QUALITY ✓
MATERIAL —
FINISH —

DRN — DATE 2-5-71
CHK'D — DATE 3/16/72
ENG — DATE 3/16/72
PROJ ENG — DATE 3/16/72
PROD — DATE 3/16/72

digital EQUIPMENT CORPORATION MAYNARD MASSACHUSETTS

TITLE: TRAP & MSC CONTROL (TMCF)

NEXT HIGHER ASSY. B-DD-1/45-Ø
SCALE —
SHEET 7 OF 7

| SIZE | CODE | NUMBER | REV |
|---|---|---|---|
| D | CS | M8105-Ø-1 | J |

DIST

DEC FORM NO DRD 183-B

This drawing and specifications, herein, are the property of Digital Equipment Corporation and shall not be reproduced or copied or used in whole or in part as the basis for the manufacture or sale of items without written permission.

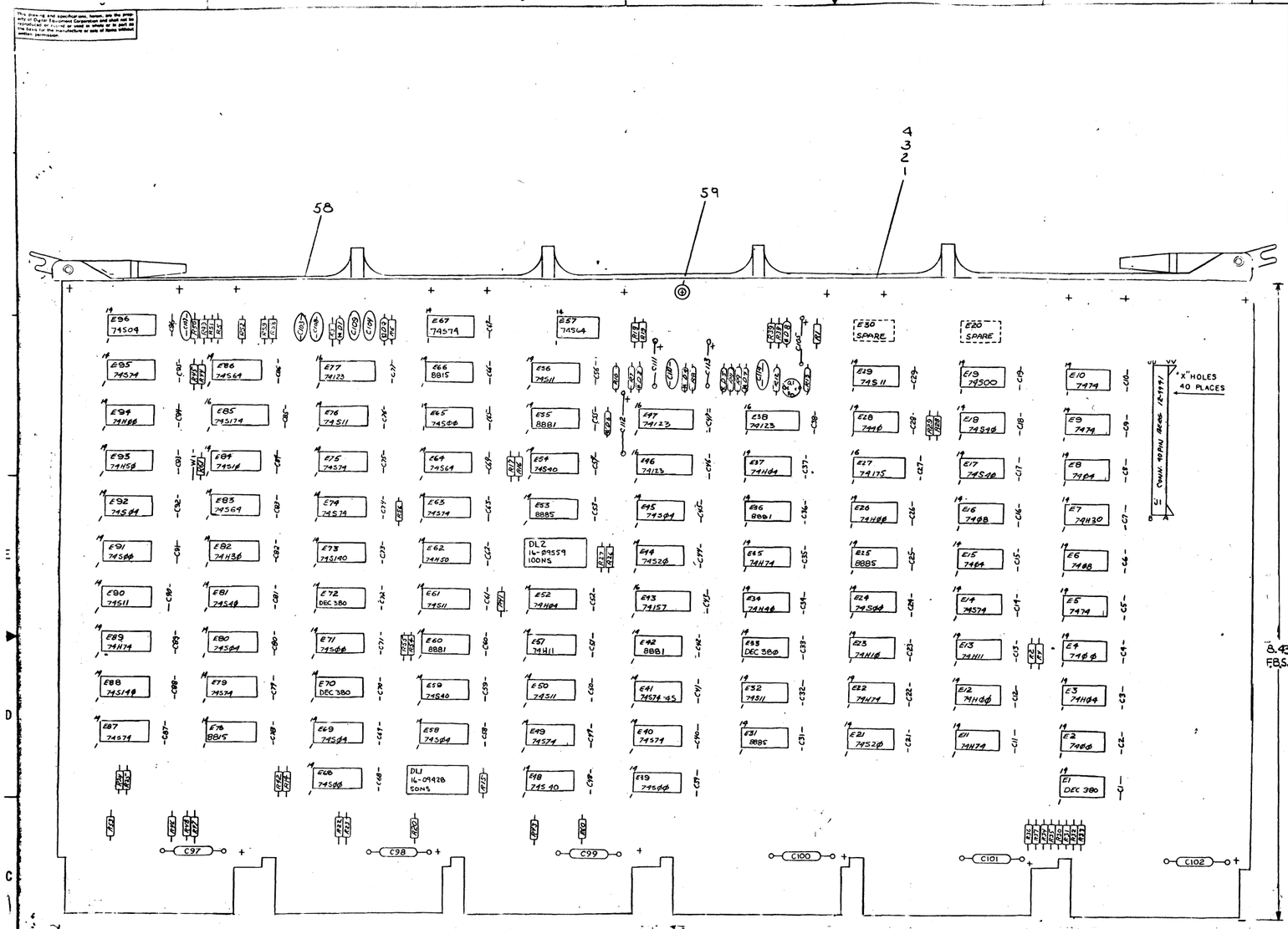


NOTES:
1. UNLESS OTHERWISE NOTED RESISTANCE IS IN Ω AND CAPACITANCE IS IN PICOFARADS. CAPS. WITHOUT VALUE NOTED ARE .01 MFD
2. RESISTOR R19, R49, R51, R54 AND R59 ARE SPARES—NO VALUES ASSIGNED

AA2, AV1, BA2, BV1, CA2, CV1, DA2, DV1, EA2, EV1, FA2, FV2

AC2, AN2, AH1, AT1, BC2, BN2, BH1, BT1, CC2, CN2, CH1, CT1, DC2, DN2, DH1, DT1, EC2, EN2, EH1, ET1, FC2, FN2, FH1, FT1

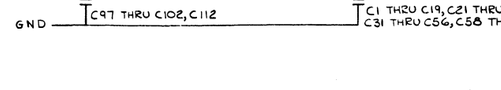


| | | | | | | | |
|---|---|---|---|---|---|---|---|
| | | | | | | | |
| DEC 74175 | 8 | 16 | | | | | |
| DEC 74157 | 8 | 16 | | | | | |
| IC TYPE | GND | + 5V | | | | | |
| GND AND 5V ARE USUALLY PIN 7 AND 14 RESPECTIVELY EXCEPTIONS ARE STATED ABOVE | | | ITEM NO. | AWG | FROM PT | TO PT |
| IC PIN LOCATIONS | | | JUMPER LIST | | | | |

| A/R | | | | |
|---|---|---|---|---|
| A/R | | INSULATED JUMPERS 22AWG | 9107350 | 62 |
| A/R | W1 | 22 AWG BUSS WIRE | 9107560-01 | 61 |
| 1 | | CONN, BERG (40 PIN) | 1209991 | 60 |
| 12 | | EYELET | 9006732 | 59 |
| 1 | | HANDLE, MODULE | E-PS-1210111-2 | 58 |
| 1 | E41 | IC DEC 74S74-45 | 1910950 | 57 |
| 2 | E66, E78 | IC DEC 8B15 | 1909713 | 56 |
| 3 | E25, E31, E53 | IC DEC 8B85 | 1910649 | 55 |
| 4 | E36, E42, E55, E60 | IC DEC 8B81 | 1909705 | 54 |
| 4 | E1, E33, E70, E72 | IC DEC 380 | 1909485 | 53 |
| 1 | E27 | IC DEC 74175 | 1910651 | 52 |
| 1 | E85 | IC DEC 74S174 | 1910550 | 51 |
| 1 | E43 | IC DEC 74157 | 1910655 | 50 |
| 2 | E73, E88 | IC DEC 74S140 | 1910546 | 49 |
| 4 | E38, E46, E47, E77 | IC DEC 74123 | 1910436 | 48 |
| 10 | E14, E40, E49, E63, E67, E74, E79, E87 E95, E75 | IC DEC 74S74 | 1910544 | 47 |
| 4 | E11, E22, E35, E89 | IC DEC 74H74 | 1909667 | 46 |
| 3 | E5, E9, E10 | IC DEC 7474 | 1905547 | 45 |
| 4 | E64, E83, E86, E57 | IC DEC 74S64 | 1910542 | 44 |
| 2 | E62, E93 | IC DEC 74H50 | 1909060 | 43 |
| 6 | E17, E18, E48, E54, E59, E81 | IC DEC 74S40 | 1910541 | 42 |
| 1 | E34 | IC DEC 74H40 | 1905586 | 41 |
| 1 | E28 | IC DEC 7440 | 1905579 | 40 |
| 2 | E7, E82 | IC DEC 74H30 | 1909059 | 39 |
| 2 | E21, E44 | IC DEC 74S20 | 1910539 | 38 |
| 7 | E29, E32, E50, E56, E61, E76, E90 | IC DEC 74S11 | 1910537 | 37 |
| 2 | E13, E51 | IC DEC 74H11 | 1909267 | 36 |
| 1 | E84 | IC DEC 74S10 | 1910536 | 35 |
| 1 | E23 | IC DEC 74H10 | 1909057 | 34 |
| 2 | E6, E16 | IC DEC 7408 | 1910155 | 33 |
| 6 | E45, E58, E69, E80, E92, E96 | IC DEC 74S04 | 1910534 | 32 |
| 3 | E3, E37, E52 | IC DEC 74H04 | 1909931 | 31 |
| 2 | E8, E15 | IC DEC 7404 | 1909686 | 30 |
| 7 | E19, E24, E39, E65 E68, E71, E91 | IC DEC 74S00 | 1910532 | 29 |
| 3 | E12, E26, E94 | IC DEC 74H00 | 1909056 | 28 |
| 2 | E2, E4 | IC DEC 7400 | 1905515 | 27 |
| 1 | DL2 | DELAY LINE 100NS | 1609559 | 26 |
| 1 | DL1 | DELAY LINE 50 NS | 1609428 | 25 |
| 1 | Q1 | TRANSISTOR DEC 3009B | 1503100 | 24 |
| 1 | R10 | RESISTOR 30K, 1/4W, 5% | 1302394 | 23 |
| 2 | R7, R11 | RESISTOR 20K, 1/4W, 5% | 1302391 | 22 |
| 5 | R1, R3, R6, R8, R9 | RESISTOR 15K, 1/4W, 5% | 1300496 | 21 |
| 1 | R12 | RESISTOR 3.9K, 1/4W, 5% | 1300494 | 20 |
| 9 | R5, R13, R26, R27, R61 R42, R43, R46, R53 | RESISTOR 1K, 1/4W, 5% | 1300365 | 19 |
| 4 | R4, R23, R25, R39 | RESISTOR 680Ω, 1/4W, 5% | 1301424 | 18 |
| 8 | R17, R28, R31, R33, R35, R37, R45, R48 | RESISTOR 390Ω, 1/4W, 5% | 1300309 | 17 |
| 4 | R2, R22, R24, R38 | RESISTOR 330Ω, 1/4W, 5% | 1300295 | 16 |
| 8 | R16, R29, R30, R32, R34, R36, R44, R47 | RESISTOR 180Ω, 1/4W, 5% | 1301322 | 15 |
| 8 | R15, R41, R52, R55, R56, R58, R60, R20 | RESISTOR 150Ω, 1/4W, 5% | 1300250 | 14 |
| 1 | R50 | RESISTOR 120Ω, 1/4W, 5% | 1300247 | 13 |
| 2 | R14, R18 | RESISTOR 100Ω, 1/4W, 5% | 1300229 | 12 |
| 8 | D1 THRU D8 | DIODE D664 | 110 0114 | 11 |
| 2 | C111, C113 | CAPACITOR .47µF, 35V, 10% | 1005965 | 10 |
| 3 | C107, C110, C114 | CAPACITOR 330PF, 100V, 5% | 1000023 | 9 |
| 1 | C105 | CAPACITOR 2.2µF, 20V, 10% | 1002627 | 8 |
| 4 | C103, C104, C108, C109 | CAPACITOR 1200PF, 100V, 5% | 1002424 | 7 |
| 7 | C97 THRU C102, C112 | CAPACITOR 6.8µF, 35V, 20% | 1000067 | 6 |
| 93 | C1 THRU C19, C21 THRU C29, C31 THRU C56, C58 THRU C96 | CAPACITOR .01µF, 100V, 20% DISC | 1001610 | 5 |
| 1 | | ETCHED CIRCUIT BOARD | 5009802 | 4 |
| REF | | MODULE ECO HISTORY | B-MH-M8106-0-0 | 3 |
| REF | | ASSY/DRILLING HOLE LOCATION | E-AH-M8106-0-5 | 2 |
| REF | | X-Y COORDINATE HOLE LOCATION | K-CO-M8106-0-4 | 1 |
| QTY | REF DESIGNATION | DESCRIPTION | PART NO. | ITEM NO. |

PARTS LIST

ETCH BOARD REV F

| DEC 3C69 B | 5003100 |
|---|---|
| DEC 3C69 | 1100118 |
| DEC NO. | EIA NO. |

SEMICONDUCTOR CONVERSION CHART

| REV | CHG NO. | REVISIONS |
|---|---|---|
| N | M8106-00007 | A. HELENIUS 6/23/73 |
| M | M8106-00006 | A. HELENIUS 6/13/73 |
| L | M8106-00005 | A. HELENIUS 6/13/73 |
| K | M8106-00004 | A. HELENIUS 6/13/73 |
| J | M8106-00003 | A. VEROSTIC 6/18/73 |
| H | M8106-00002 | A. VEROSTIC 6/13/73 |
| G | M8106-00001 | A. VEROSTIC 6/12/73 |

DRN. [illegible] DATE 5-7-73
CHKD. [illegible] DATE 5-7-73
ENG. [illegible] DATE 5-7-73
PROJ ENG. [illegible] DATE 5-7-73
PROG [illegible] DATE 5-7-73
NEXT HIGHER ASSY B-DD-KB11-B
SCALE 1/1 SHEET 1 OF 1 C

DIGITAL EQUIPMENT CORPORATION MAYNARD MASSACHUSETTS

TITLE: UNIBUS & CONSOLE CONTROL

SIZE E CODE 07000 NUMBER CS M8106-C-1 REV N

DIST

CS M8106-C-1 N

This drawing and specifications, herein, are the property of Digital Equipment Corporation and shall not be reproduced or copied or used in whole or in part as the basis for the manufacture or sale of items without written permission.



+5V R26 1K

74S04Ø E54 — 1ØØØ NS DL2 — R27 1K — LOCATION BETWEEN S2 AND S3

74H04 E52 — UBCA D SACK H — UBCA D SACK L

UBCA UNIBUS RELEASE H

8815 E66 — UBCD NPR (Ø) L — UBCD NPG (Ø) L

BUSA BBSY L — ED2 — 38Ø E72 — R43 1K — DM1 — UBCA BBSY MAT H

74H04 E52 — UBCA BBSY L

BUSA SACK L — FJ2 — 38Ø E72 — UBCA SACK B H

74S04Ø E65 — UBCA +3V H — UBCA BLP DESKEW H — 74S74 E75 — TIGC T1B H — DJ2 — UBCA +3V H

8881 E6Ø — ED2 — BUSA BBSY L

UBCA CPBSY (1) H

74S74 E75 — UBCA CPBSY (Ø) H

74S11 E76 — UBCA GET BUS (1) H — UBCC SSYN * (C) L — UBCA DESKEW ADRS H

74S04Ø E59 — DT2 — UBCA CPBSY B H

UBCA +3V H — TMCE BUST H — EP1 — 74S74 E74 GET BUS — UBCA GET BUS (1) H

TIGD T3 B H — (EJ2) — R56 150

TMCE BUST OUT L — ER1 — 74S04 E69 — UBCA BUST OUT B H

74S04Ø E54 — UBCA +3V H

UBCB MSYN SET H — UBCB CLR UNI H — 8885 E53

UBCB CLR UNI H — 74S64 E69 — TMCE PAUSES B L — BN1 — UBCB BUST B L — UBCC DATIP L

UBCB MSYN (Ø) L — UBCA GET BUS (Ø) L — 8815 E66 — CH2 — UBCA BLP DESKEW H

UBCC DATIP L — TMCE BUS LONG PAUSE H — DS1 — 74S04Ø E65

74S74 E63 PASSIVE — UBCD GRANT BR (1) L — UBCA BBSY L — UBCD LONG SACK L — 74S20 E44

UBCD GRANT BR H — UBCA PASSIVE (Ø) H — UBCC INTR B L — 74H10 E23 — CD1 — UBCA INTR RESTART

UBCE INIT L — TIGD T5 L — DB2 — 74S11 E61 — R41 150

EJ2 — TIGD T3 B H — 74S00 E39

TIGE TS4 L — ES1 — R16 180 — R17 390 — +5V — 74S04 E69 — UBCA TS4 CLK H

TMCE BEND ERR L — DP1 — TMCE PAUSES B H — FT2 — 74S11 E61

UBCB DESKEW COMP H — DN1 — TMCC ABORT H — 74H50 E62

UBCB MSYN (1) H — UBCC SSYN B H — SSRC KTIC ABORT FLG L — DD2 — 74S10 E84 — FA1 — UBCA SSYN RESTART H

UBCB TIME OUT (Ø) H

R42 1K — EU2 — UBCA CONTROL OK MAT H

74S74 E63 CONTROL OK — FC1 — TIGC T1B L — 74S140 E73 — EF1 — UBCA CONTROL OK H

UBCE INIT L

TIGE TS2 L — CP2 — R44 180 — R45 390 — +5V — 74S04 E69 — UBCA TS2 CLK H

NOTES:
1. UNLESS OTHERWISE STATED ALL RESISTORS ARE 1/4 5%.

R57, R4Ø IS A SPARE; NO VALUE ASSIGNED.

CP BUSY; CONTROL OK; TIG RESTARTS — SLOT 12

| REVISIONS | REV. | CHANGE NO. | C'K |
|---|---|---|---|

| FIRST USED ON OPTION/MODEL | QTY. | DESCRIPTION | PART NO. | ITEM NO. |
|---|---|---|---|---|
| 11/45 | | PARTS LIST | | |

UNLESS OTHERWISE SPECIFIED DIMENSION IN INCHES. TOLERANCES

| DECIMALS | ANGLES |
|---|---|
| .XXX = .005<br>.XX = .02<br>.X = .1 | ±0° 30' |

REMOVE BURRS AND BREAK SHARP CORNERS SURFACE QUALITY ✓

MATERIAL —

FINISH —

| | | |
|---|---|---|
| DRN. K. Davis | DATE 1-24-71 | digital EQUIPMENT CORPORATION MAYNARD MASSACHUSETTS |
| CHK'D [illegible] | DATE 3/2/72 | |
| ENG. Andy Kleinhans | DATE 3-3-72 | TITLE UNIBUS & CONSOLE CONTROL (UBCA) |
| PROJ. ENG. [illegible] | DATE 3-4-72 | |
| PROD. [illegible] | DATE 3-5-72 | |

NEXT HIGHER ASSY. B-DD-KB11-Ø

SCALE —

SHEET 2 OF 14

| SIZE | CODE | NUMBER | REV. |
|---|---|---|---|
| D | CS | M8IØ6-Ø-1 | N |

DIST.

DEC FORM NO DRD 102-B

This drawing and specifications, herein, are the property of Digital Equipment Corporation and shall not be reproduced or copied or used in whole or in part as the basis for the manufacture or sale of items without written permission.



UBCA +3V H
UBCC C1 BL
TMCE BUS LONG PAUSE H
UBCB MSYN (1) H
74H11 E51
74S74 E15 D-TYPE
FU2
UBCC SSYN BL
UBCB TIMEOUT (Ø) H
R50 120
R49
C107 330 +5V
(CP2)
TIGE TSZ L
74S11 E76
UBCA DESKEW ADRS H
UBCB DESKEW A
UBCB DESKEW B
UBCB DESKEW C
UBCB DESKEW D
UBCB DESKEW E
74S174 E85 DESCEW REGISTER CLR CLK
UBCB DESKEW A
UBCB DESKEW B
UBCB DESKEW C
UBCB DESKEW D
UBCB DESKEW E
UBCB DESKEW COMP H
TIGC TF H
EL1
R59
+5V
R58 150
TMCF FAST L
EF2
74S04 E69
EP2 UBCB FAST H
UBCB NOT UNI L
UBCB CLR UNI H
UBCA TS2 CLK H
RACB UBSDØ1 H
74S10 E84
74S20 E21
UBCE INIT L
TMCE INTR CLR L
TMCE BEND CLR L
R18 100
TIGC T2 H
UBCA +3V H
74S11 E56
74S69 E83
UBCB CLR DESKEW L
TMCE BSOP2 H
TMCE CI H
RACA UBRK H
UBCA TS4 CLK H
74S74 E67
UBCC SSYN B H
UBCA +3V H
TMCE BUST H
UBCB BUST B L
74S04 E69
74S00 E68
UBCB TS3 CLK H
UBCB BUST MAT H
SMCB PE HALT L
TMCE PAUSE B H
74S00 E68
EJ1 UBCB PARITY ERR SET L
R22 330
R23 680
+5V
R61 1K
BUS A PA L
BUS A PB L
74S04 E72
74S00 E71
74S74 E79 UNIT RESET
UBCB MSYN (Ø) H
UBCB ABORT ACKN L
UBCE INIT L
74S11 E61
W1
UBCA +3V H
R24 330
R25 680
SMCB PERF L
74S74 E87
UBCA CONTROLOK(1) L
TMCE PAUSES B L
74S74 E49
TIGC TIB H
DV2
UBCA +3V H
74S64 E57
8 EA1 UBCB PE ABORT L
UBCB PERF ACKN H
EH2
R46 1K
FH2 UBCB PARITY ERR MAT H
UBCB PARITY ERR H
UBCB PARITY INH L
TMCE PAUSES B L
BN1
74S00 E68
FF1 UBCB PARITY ERR L
R47 180
R48 390
+5V
TIGE TS3 L
74S04 E80
UBCB TS3 CLK H
RACC UBCT Ø2 H
RACC UBCT Ø1 H
74S40 E81
UBCB ACKN L
UBCB BCTØØ B L
RACC UBCT ØØ H
UBCB ABORT ACKN L
BF2
74S04 E80
EV2 UBCB ACKN B H
74S04 E45
FS2 UBCB ABORT ACKN H
UBCC SSYN BL
UBCE INIT L
UBCB ABORT ACKN L
74S11 E76
UBCB MSYN (1) H
74S74 E79 MSYN
74S51 E60
EDI BUSA MSYN L
UBCB MSYN B H
74S00 E70
R53 1K
FRI UBCB MSYN B MAT H
TIGDT3 B H
EC1
R20 150
UBCC DATO MSYN CLR H
UBCB TIMEOUT H
UBCE INIT H
UBCB BUS LOAD H
74S15 E78
UBCB MSYN (Ø) H
74S04 E58
EU1 UBCB MSYN SET H
74H04 E52
UBCB TIMEOUT H
UBCA +3V H
74S74 E74 TIMEOUT
DU1 UBCB TIMEOUT (1) H
DR1 UBCB TIMEOUT (Ø) H
74123 E77 10µSEC
C103 1200 pf
C108 1200 pf
+5V
R3 15K
DØ6A D1
74S64 E86
8 DH2 UBCB CLK BR H
DK2
TIGC TIB L
FC1
RS1
RS2 150
+5V
RACA UBRK H
DU2
74S04 E58
FU1
FD1 UBCB BUS LOAD H
74S04 E96
TIGE TSZ L
74S04 E76
74H30 E82
TMCC ODD ADRS ERR L
CSPC KTIC HBORT FLG L
TMCD SL REED L
FD2
FE2
FF2
DD2
EL2

* FOR TIMES OTHER THAN 10 µSEC, USE THE FOLLOWING TABLE:

| APPROX. TIME | C103 | C108 |
|---|---|---|
| 5 µSEC | — | 1200 pf |
| 10 µSEC | 1200 pf | 1200 pf |
| 40 µSEC | 1200 pf | .01 µfd |
| 70 µSEC | .01 µfd | .01 µfd |
| 900 µSEC | — | .22 µfd |
| 2 MS | .22 µfd | .22 µfd |
| 5 MS | — | 1 µfd |

R59 R51, R49, R19 ARE SPARES - NO VALUE ASSIGNED.

MSYN; TO; PE; BUS LOAD SLOT 12

| FIRST USED ON OPTION/MODEL | QTY. | DESCRIPTION | PART NO. | ITEM NO. |
|---|---|---|---|---|
| 11/45 | | PARTS LIST | | |

UNLESS OTHERWISE SPECIFIED DIMENSION IN INCHES. TOLERANCES
DECIMALS: .XXX = .005, .XX = .02, .X = .1 — ANGLES: ±0° 30'
REMOVE BURRS AND BREAK SHARP CORNERS SURFACE QUALITY ✓
MATERIAL
FINISH

| | | |
|---|---|---|
| DRN. T. Davis | DATE 9-7-71 | digital EQUIPMENT CORPORATION MAYNARD MASSACHUSETTS |
| CHKD. Ken Clay | DATE 3/3/72 | |
| ENG. Andy Mac Kay | DATE 3-3-72 | TITLE UNIBUS & CONSOLE CONTROL (UBCB) |
| PROJ. ENG. Andy Mac Kay | DATE 3-3-72 | |
| PROD. D. Hugh | DATE 3-15-72 | |
| NEXT HIGHER ASSY. B-DD-KB11-Ø | | SIZE D CODE CS NUMBER M8106-Ø-1 REV. N |
| SCALE | | |
| SHEET 3 OF 14 | | DIST. |

REVISIONS — REV — CHANGE NO. — CHK

DEC FORM NO. DRD 102-B

This drawing and specifications, herein, are the property of Digital Equipment Corporation and shall not be reproduced or copied or used in whole or in part as the basis for the manufacture or sale of items without written permission.



BUSA CLL
ACI
38Ø E33
8885 E31
EE2
BUSA CØ L

TMCB PIRQ L DF2
TMCA HONOR PWRF L DF1
74S11 E9Ø
UBCC (PWRF + INTR) L
UBCA +3V H
INTRF E89 74H74
UBCC INTRF(1) H
TMCB CLR INTRF L FK2

UBCC SSYN MAT H
BAI
R5 1K
8881 E55
BUSA SSYN L
38Ø E7Ø
UBCC SSYN B H
74S04 E92
UBCC SSYN B L
74H0Ø E99
UBCC SSYN * CI L
UBCC CI B H

UBCC DATOB L
UBCC DATO L
74H5Ø E93
FN1
UBCC HI BYTE H

ES2
UBCC INTR B H
BUSA INTR L AD2
38Ø E7Ø
74S04 E92
UBCC INTR B L
74S00 E24

UBCA +3V H
INT SSYN 74S74 E87
TIGC TIB H (DJ2)
74S00 E71
R54 R55 150
+5V
DLI 50NS LOCATED BETWEEN EST & ES8
R15 150 +5V
R14 100Ω
TMCD INTERNAL ADRS# DG2
UBCB MSYN SET H
74S40 E59
74S04 E92
FE1
UBCC CLK SSYN H

TIGE TS4 L (ES1)
8885 E53
DAPB BAMX ØØ H
UBCC DATO MSYN CLR H

UBCA +3V H
UBCC CC DATA(1) H
TMCD PSADRS H FR2
UBCC DATO L
UBCC DATOB L
74H00 E94
74H59 E93
CC DATA E95 74S74
FV2
UBCB MSYN B H
FP2
UBCC LO BYTE H

UBCB MSYN (Ø) H
UBCC INTR B L
74H00 E94

UBCA TS4CLK H
TMCE PAUSES B L (BN1)
74H00 E94

UBCC CØ B H
UBCA +3V H
74S11 E9Ø
UBCC DATOB L
74S04 E91
UBCC CØ B L
74S04 E58
UBCC DATO L
UBCA CP BSY (1) H
74S10 E84
UBCC DATIP L
UBCC CI B L
74S04 E58
74S04 E91
FM2
UBCC DATI L
UBCA +3V H
74S11 E9Ø
UBCC CI B H

TMCE CØ H EB1
8881 E6Ø
(EE2) BUSA CØ L
TMCE CI H DLI
UBCA CPBSY B H
8881 E6Ø
10 (AC1) BUSA CI L
74S140 E88
FK1
UBCC MEM BUS CØ L
74S140 E88
FM1
UBCC MEM BUS CI L
UBCA +3V H

R54 IS A SPARE: NO VALUE IS ASSIGNED.

INTERNAL SSYN; INTRF; CC DATA SLOT 12

| FIRST USED ON OPTION/MODEL | QTY. | DESCRIPTION | PART NO. | ITEM NO. |
|---|---|---|---|---|
| 11/45 | | PARTS LIST | | |

UNLESS OTHERWISE SPECIFIED DIMENSION IN INCHES. TOLERANCES
DECIMALS .XXX = .005 .XX = .02 .X = .1
ANGLES ±0° 30'
REMOVE BURRS AND BREAK SHARP CORNERS SURFACE QUALITY ✓
MATERIAL --
FINISH --

DRN. R Cartwright DATE 24JUN71
CHK'D. [illegible] DATE 8/3/72
ENG. Cindy Durette DATE 7-5-72
PROJ. ENG. [illegible] DATE -
PROD. [illegible] DATE 8-1-72
NEXT HIGHER ASSY. B-DD-KB11-Ø
SCALE --
SHEET 4 OF 14

digital EQUIPMENT CORPORATION MAYNARD MASSACHUSETTS

TITLE UNIBUS & CONSOLE CONTROL (UBCC)

SIZE D CODE CS NUMBER M81Ø6-Ø-1 REV. N
DIST.

REVISIONS | REV | CHANGE NO | CHK

DEC FORM NO. DRD 102-B

M81Ø6-Ø-1

This drawing and specifications, herein, are the property of Digital Equipment Corporation and shall not be reproduced or copied or used in whole or in part as the basis for the manufacture or sale of items without written permission.



TMCA HONOR BR7 L
TMCA HONOR BR6 L
TMCA HONOR BR5 L
TMC B HONOR BR4 L
74S20 E44
74S04 E45
D.11
UBCD EXT BRQ L
CU2
UBCD EXT BRQ H

UBCD GRANT L
74S00 E39
UBCD GRANT CLK L

TMCA HONOR BR7 L (CV2)
TMCA HONOR BR6 L (DB1)
TMCA HONOR BR5 L (DE2)
TMCB HONOR BR4 L (DB2)
74157 E43
UBCD PROC BG7 H
UBCD PROC BG6 H
UBCD PROC BG5 H
UBCD PROC BG4 H
8881 E42
UBCD GRANT BR (Ø) H

UBCD NPG (Ø) H
74S11 E32
UBCD GRANT L

UBCD NPR RQ L
74S74-45
SERVICE BR E41
GRANT BR 74S74 E40
UBCD SERVICE BR (Ø) H
UBCD GRANT CLR L

TMCE INTR PAUSE H
UBCA TS2 CLK H
74S11 E50
TMCC FREE CLK(1) H
74S11 E50
74H04 E52
UBCD GRANT BR H

UBCA PASSIVE(1) L
UBCE INIT L
74S11 E50

NOTE:
TO OBTAIN 5.4 SEC TIME OUT
REMOVE ONE OF THE CAPACITORS
BETWEEN PINS 7 & 6.

UBCD +3V H
TMCE FLOATING ATTN H
FP ATTN 74S74 E49
74S40 E48
UBCD FP ATTN L
TIGD TSB H
R60 150
TIGC TIB H (DJ2)
UBCE INIT L
74S04 E45
UBCD FP ATTN H

UBCD GRANT L
UBCD +3V H
+5V
R6 15K
D2 D664
74123 E77
C105 C104 1200 PF
10 MSEC
NO SACK 74H74 E89
UBCA SACK B H
UBCA DSACK H
8885 E53
UBCD LONG SACK L
UBCD GRANT L
74S00 E39
UBCE INIT L
74H11 E51
UBCA D SACK L
UBCD NO SACK (1) L

UBCD NPR RQ L
UBCD +3V H
BUS A NPR L (EE1)
UBCF DISABLE NPR H
3870 E70
74S00 E24
UBCC DATIP L
UBCE ACLO B L
74S11 E29
TMCC FREE CLK(1) H (DA1)
NPR E41
UBCD NPR (1) H
74S74-45
UBCD SERVICE BR (Ø) H
74S00 E39
UBCD GRANT CLK L
UBCD +3V H
NPG 74S74 E40
UBCD NPG (1) H
8881 E55
BK1
UBCD PROC NPG H
UBCD NPG (Ø) H
UBCE INIT L
UBCA DSACK L
UBCD NO SACK (1) L
74H11 E51
UBCD GRANT CLR L

NPR-BR SERVICING; FP ATTENTION SLOT 12

| FIRST USED ON OPTION/MODEL | QTY. | DESCRIPTION | PART NO. | ITEM NO. |
|---|---|---|---|---|
| 11/45 | | PARTS LIST | | |

UNLESS OTHERWISE SPECIFIED DIMENSION IN INCHES. TOLERANCES
DECIMALS: .XXX = .005, .XX = .02, .X = .1 — ANGLES: ±0° 30'
REMOVE BURRS AND BREAK SHARP CORNERS SURFACE QUALITY ✓
MATERIAL —
FINISH —

| | | DATE |
|---|---|---|
| DRN. | | 6/24/71 |
| CHKD. | | 3/5/72 |
| ENG. | | 7-3-72 |
| PROJ ENG. | | 7-3-72 |
| PROG. | | 7-15-72 |

NEXT HIGHER ASSY. B-DD-KB11-Ø
SCALE —
SHEET 5 OF 14

digital EQUIPMENT CORPORATION MAYNARD MASSACHUSETTS

TITLE
UNIBUS & CONSOLE CONTROL
(UBCD)

| SIZE | CODE | NUMBER | REV. |
|---|---|---|---|
| D | CS | M8106-Ø-1 | N |

DIST.

REVISIONS | REV | CHANGE NO | CHK

DEC FORM NO. DRD 102-B

This drawing and specifications, herein, are the property of Digital Equipment Corporation and shall not be reproduced or copied or used in whole or in part as the basis for the manufacture or sale of items without written permission.



8 7 6 5 4 3 2 1

D C B A

+5V R7 20K C111 .47UF D3 D664 2MS 74123 E47 R8 15K .Ø1UF 33ØPF D4 D664 DCLØ 1ØUSEC 74123 E47 8881 E55 3ØØ E33 UBCE DC LO B H CU1 BUSA DCLO L

TMCA HONOR PWRF L (DF1) TMCC AC CLEAR L DF2 8885 E53 UBCE +3V H

UBCE PF CLR (1) H BR2 UBCE PF CLR (1) L PF CLR 74H74 E22 UBCE BUST + DC LO B L

RACC UBCT Ø1 H (DV2) 74SØ4 E58 RACC UBCT Ø2 H (CV2) UBCB BCT ØØ B L UBCB TS3 CLK H 74S2Ø E21 PDRD PSHØØ H CS2 RESET ABORT 74123 E38 1ØUSECØ C114 33ØPF R9 15K D7 D664 UBCE +3V H

UBCE +3V H R1 15K C105 2.2UF D66A D8 RESET 1ØMS 74123 E38 74SØØ E65 UBCE PDNF (1) H

R38 33Ø R39 68Ø +5V 74H04 E37 CL2 UBCE FP SYNC H FRMJ FP SYNC L CM1 74S11 E32 CM2 UBCE RIP+FP SYNC L

UBCE DC LO B H 74H04 E37 UBCE ALLOW UP(1) H ALLOW UP 74H74 E11 74H00 E26 UBCB ABORT ACKN L

CBI UBCE PUPF (1) H PUPF 74H74 E11 UBCE +3V H RESTART 7ØMS 74123 E46 R1Ø 3ØK C112 6.8UF D6 D664 UBCE ACLO B L

BMI UBCE DC LO B L 74H11 E13 UBCF CNSL RESET L 74H11Ø E23 8881 E55 AR1 BUSA INIT L 74H04 E37 CU UBCE INT BUS INIT L

74S2Ø E24 CD2 UBCE ROM INIT H 74H4Ø E39 CR1 UBCE INIT H 74H04 E37 8881 E36 DEC 3ØØ9B Q1 R12 3.9K +5V R13 1K CK1 UBCE INIT L

FB2 UBCE START INIT L 74H00 E26

BUSA AC LO L CS1 38Ø E33 8885 E25 UBCE MAINT PF L BE1 UBCE +3V H MAINT PF 74S74 E14 33Ø R2 68Ø R4 +5V 74H00 E12 UBCE DCLO B L

UBCE PFCLR(1) H UBCE DC LO B H 8885 E25 UBCE PUPF(1) L UBCB TS3 CLK H R11 2ØK D664 D5 C113 .47UF DOWN 1 DLY 2MS 74123 E46 BLOCK DOWN 74H74 E35 74H04 E37 74H00 E26

UBCE +3V 74H40 E34 UBCE ALLOW UP (1) H UBCE PF CLR (1) H 85 E3 6

UBCE PDNF (1) H PDNF 74H74 E22 CF2

UBCA BUST OUT B H UBCE DC LO B H 8885 E25 UBCE BUST + DC LO B L

UBCJ HALT SW H UBCF START H START FLAG 74H74 E35 UBCF START H 8885 E31 CU1 UBCE STATUS CLR L

* UBCE MAINT PF - WHEN GROUNDED CAN BE USED TO SCOPE CP POWER FAIL LOGIC WHEN RUNNING A POWER FAIL DIAGNOSTIC.

AC POWER
BUS ACLO L
BUS DCLO L
PDNF
BLOCK DOWN 2MS
ACKN PWRF
ALLOW UP
PUPF
7ØMS RESTART 7ØMS
ACKN PUP

POWER FAIL INITIALIZE SLOT 12

| FIRST USED ON OPTION/MODEL | QTY. | DESCRIPTION | PART NO. | ITEM NO. |
|---|---|---|---|---|
| 11/45 | | PARTS LIST | | |

UNLESS OTHERWISE SPECIFIED DIMENSION IN INCHES. TOLERANCES
DECIMALS .XXX = .005 .XX = .02 .X = .1 ANGLES ±0° 30'
REMOVE BURRS AND BREAK SHARP CORNERS SURFACE QUALITY ✓
MATERIAL //
FINISH —

DRN. DATE 6-23-72
CHK'D DATE 3-3-72
ENG. DATE 3-3-72
PROJ. ENG. DATE 3-3-72
PROD. DATE 3-15-72
NEXT HIGHER ASSY. B-DD-KB11-Ø

digital EQUIPMENT CORPORATION MAYNARD MASSACHUSETTS

TITLE UNIBUS & CONSOLE CONTROL (UBCE)

SIZE D CODE CS NUMBER M81Ø6-Ø-1 REV. N
SCALE —
SHEET 6 OF 14 DIST.

REVISIONS REV CHANGE NO. CHK

DEC FORM NO. DRD 102-B

This drawing and specifications, herein, are the property of Digital Equipment Corporation and shall not be reproduced or copied or used in whole or in part as the basis for the manufacture or sale of items without written permission.



UBCF EXAM (1) H
UBCJ EXAM SW H
UBCF EXAM (Ø) H
UBCF REG EXAM (1) H
UBCJ REG EXAM SW H
UBCF REG EXAM (Ø) H
UBCF DEPOS (1) H
UBCJ DEP SW H
UBCF DEPOS (Ø) H
UBCF ACKN T4 L
TMCE INTR CLR L
UBCE INIT L
UBCF +3V H
UBCJ REG DEP SW H
UBCF REG DEP (Ø) H
XDDC DDC BEGIN L
UBCF BEGIN H
UBCF +3V H
TMCA CONF (1) H
UBCJ START SW H
XDDC DDC STOP L
UBCF DDC STOP L
UBCF START H
UBCE DC LO B L
UBCF CLR START L
UBCF +3V H
UBCF CONT (1) H
UBCJ CONT SW H
UBCF CONT (Ø) H
XDDC DDC LOAD L
UBCF STOP H
UBCF +3V H
UBCF CNSLØ7 (1) H
UBCF DDC LD ADRS L
UBCF +3V H
UBCF CNSLØ7 (Ø) H
UBCJ LOAD ADRS SW H
UBCF LAS L
UBCF CLKLA H
UBCF ACKN T4 L
TMCE INTR CLR L
UBCE INIT L
UBCF CLR CONTROL REG L
UBCF ACT H
UBCB TS3 CLK H
TMCA CONF (1) H
UBCF ACTIV L
AV2
UBCF CNSL ACT (1) H
AT2
UBCF CNSL ACT (Ø) H
UBCF CLR CONTROL REG L
UBCF START H
UBCJ HALT SW H
XDDC DDC INIT L
UBCF CNSL RESET L
TMCF DDC ATTN(1) H
UBCF DDC ATTN L
UBCF DDC STOP L
AJ2
UBCF S/INST L
UBCJ HALT SW H
UBCF STOP L
UBCJ SINGLE CYCLE SW H
UBCF DISABLE NPR H
RACC UBCTØ2 H
RACC UBCTØ1 H
UBCB BCTØØ B L
UBCF ACKN LEVEL H
UBCA TS4 CLK H
UBCF ACKN T4 L

CONSOLE FUNCTIONS SLOT 12

| FIRST USED ON OPTION/MODEL | QTY. | DESCRIPTION | PART NO. | ITEM NO. |
|---|---|---|---|---|
| 11/45 | PARTS LIST | | | |

UNLESS OTHERWISE SPECIFIED DIMENSION IN INCHES. TOLERANCES
DECIMALS: .XXX = .005, .XX = .02, .X = .1 — ANGLES: ±0° 30'
REMOVE BURRS AND BREAK SHARP CORNERS SURFACE QUALITY ✓
MATERIAL —
FINISH —

DRN. S.W. Roberts DATE 6/25/71
CHK'D DATE
ENG. Andy Wentworth DATE 7-3-72
PROJ. ENG. DATE 7-3-72
PROG. DATE

digital EQUIPMENT CORPORATION MAYNARD MASSACHUSETTS

TITLE: UNIBUS & CONSOLE CONTROL (UBCF)

NEXT HIGHER ASSY. B-DD-KB11-Ø
SIZE D CODE CS NUMBER M81Ø6-Ø-1 REV N
SCALE —
SHEET 7 OF 14
DIST:

REVISIONS | REV | CHANGE NO | CHK

DEC FORM NO DRD 102-B

This drawing and specifications, herein, are the property of Digital Equipment Corporation and shall not be reproduced or copied or used in whole or in part as the basis for the manufacture or sale of items without written permission.



| CONSOLE FUNCTION | MICRO ADRS BIT 7 | 2 | 1 | 0 |
|---|---|---|---|---|
| EXAM | 0 | 0 | 0 | 0 |
| STEP EXAM | 0 | 0 | 0 | 1 |
| REG EXAM | 0 | 0 | 1 | 0 |
| DEPOSIT | 0 | 0 | 1 | 1 |
| STEP DEPOSIT | 0 | 1 | 0 | 0 |
| REG DEPOSIT | 0 | 1 | 0 | 1 |
| START | 0 | 1 | 1 | 0 |
| CONTINUE | 0 | 1 | 1 | 1 |
| LD ADRS | 1 | 0 | 0 | 0 |

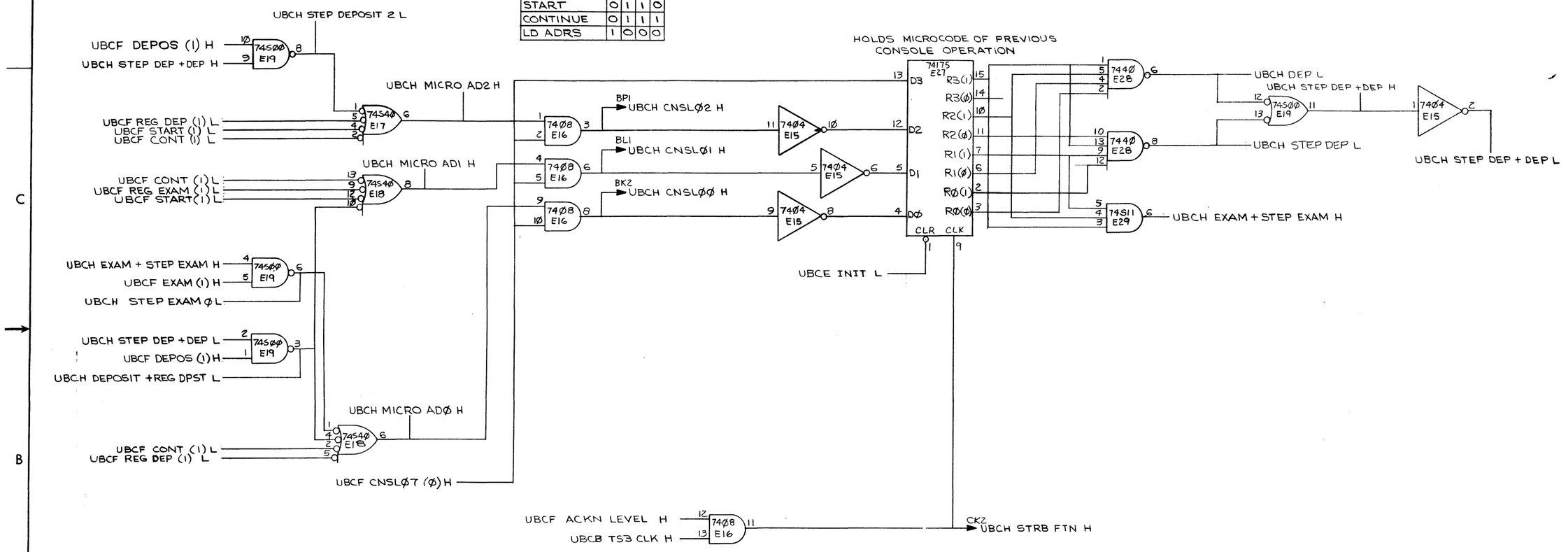


CONSOLE µ ADRS SLOT 12

| FIRST USED ON OPTION/MODEL | QTY. | DESCRIPTION | PART NO. | ITEM NO. |
|---|---|---|---|---|
| 11/45 | | PARTS LIST | | |

UNLESS OTHERWISE SPECIFIED DIMENSION IN INCHES. TOLERANCES
DECIMALS: .XXX = .005, .XX = .02, .X = .1 | ANGLES: ±0° 30'
REMOVE BURRS AND BREAK SHARP CORNERS SURFACE QUALITY ✓
MATERIAL —//—
FINISH —//—

| | | |
|---|---|---|
| DRN. | | DATE 6/24/71 |
| CHK'D. | | DATE 7/7/72 |
| ENG. | | DATE 7-7-72 |
| PROJ. ENG. | | DATE 7-7-72 |
| PROD. | | DATE 7-15-72 |

digital EQUIPMENT CORPORATION MAYNARD MASSACHUSETTS

TITLE: UNIBUS & CONSOLE CONTROL (UBCH)

NEXT HIGHER ASSY. B-UD-KB11-Ø

| SIZE | CODE | NUMBER | REV. |
|---|---|---|---|
| D | CS | M8106-Ø-1 | N |

SCALE —//— SHEET 8 OF 14 DIST.

REVISIONS | CHK

DEC FORM NO DRD 102-B

This drawing and specifications, herein, are the property of Digital Equipment Corporation and shall not be reproduced or copied or used in whole or in part as the basis for the manufacture or sale of items without written permission.

TMCE INTR PAUSE L — BM2 — pin 1
TMCE PAUSESB L — (BN1) — pin 2
74H00 E12 — pin 3 — UBCJ IND PAUSE H

TMCA CONF(1) L — BL2 — pin 4
UBCA CPBSY(1) L — pin 5
74H00 E12 — pin 6 — UBCJ IND MASTER H

UBC/KNL INTERFACE

| SIGNALS TO CONSOLE | | SIGNALS FROM CONSOLE | |
|---|---|---|---|
| SAPK DISP ADRSØØ H | AM2 | A | |
| SAPK DISP ADRSØ1 H | AM1 | B | |
| SAPK DISP ADRSØ2 H | AL1 | C | |
| SAPK DISP ADRSØ3 H | AN1 | D | |
| SAPK DISP ADRSØ4 H | AL2 | E | |
| SAPK DISP ADRSØ5 H | AP1 | F | |
| SAPK DISP ADRSØ6 H | AK1 | H | |
| SAPK DISP ADRSØ7 H | AP2 | J | |
| SAPK DISP ADRSØ8 H | AK2 | K | |
| SAPK DISP ADRSØ9 H | AR1 | L | |
| SAPK DISP ADRS1Ø H | AH2 | M | |
| SAPK DISP ADRS11 H | AR2 | N | |
| SAPK DISP ADRS12 H | AE2 | P | |
| SAPK DISP ADRS13 H | AS1 | R | |
| SAPK DISP ADRS14 H | AE1 | S | |
| SAPK DISP ADRS15 H | AS2 | T | |
| SAPK DISP ADRS16 H | AF1 | U | |
| SAPK DISP ADRS17 H | AU1 | V | |
| | AD1 | W | |
| UBCJ IND PAUSE H | | Y | |
| TMCF IND ADRS ERR H | FS1 | Y | |
| UBCJ IND MASTER H | | Z | |
| TMCF IND RUN H | AB2 | AA | |
| | | BB | BS1 — UBCJ DISP ADRS SELØ H |
| | | CC | BT2 — UBCJ DISP ADRS SEL1 H |
| | | DD | AF2 — UBCJ PNL LOCK H |
| | | EE | BS2 — UBCJ CONT SW H |
| | | FF | BV2 — UBCJ SINGLE CYCLE SW H |
| | | HH | UBCJ LOAD ADRS SW H |
| SSRB SRØ MODE 1 H | BC1 | JJ | |
| | | KK | UBCJ START SW H |
| SAPA IND DATA H | BE2 | LL | |
| | | MM | UBCJ REG EXAM SW H |
| | | NN | UBCJ EXAM SW H |
| +5VB | | PP | |
| | | RR | UBCJ REG DEP SW H |
| | | SS | AB1 — UBCJ DISP ADRS SEL2 H |
| | | TT | UBCJ DEP SW H |
| | | UU | |
| | | VV | BU2 — UBCJ HALT SW H |

7008864

CONSOLE CABLE; INDICATORS SLOT 12

| FIRST USED ON OPTION/MODEL | QTY. | DESCRIPTION | PART NO. | ITEM NO. |
|---|---|---|---|---|
| 11/45 | | PARTS LIST | | |

UNLESS OTHERWISE SPECIFIED DIMENSION IN INCHES. TOLERANCES
DECIMALS: .XXX = .005, .XX = .02, .X = .1 — ANGLES: ±0° 30'
REMOVE BURRS AND BREAK SHARP CORNERS SURFACE QUALITY ✓
MATERIAL —
FINISH —

DRN. — DATE 6-25-71
CHKD. — DATE 3/3/72
ENG. — DATE 3-7-72
PROJ. ENG. — DATE 3-7-72
PROD. — DATE 3-15-72
NEXT HIGHER ASSY. B-UD-KB11 Ø
SCALE —
SHEET 9 OF 14

digital EQUIPMENT CORPORATION MAYNARD MASSACHUSETTS

TITLE: UNIBUS & CONSOLE CONTROL (UBCJ)

SIZE D | CODE CJ | NUMBER 1,8106-Ø-1 | REV. N | DIST.

REVISIONS — CHANGE NO. — CHK

DEC FORM NO DRD 102-B

SIZE D | CODE CS | NUMBER M8106-Ø-1 | REV N

This drawing and specifications, herein, are the property of Digital Equipment Corporation and shall not be reproduced or copied or used in whole or in part as the basis for the manufacture or sale of items without written permission.



WAT.2Ø
BRK.ØØ
} INTR PAUSE
RACB UBSD ØØ:Ø1=1

-(BR4+BR5+BR6+BR7)

BR4 + BR5 + BR6 + BR7

SERVICE ALL EXISTING NPR'S

NPR+SACK+NPG

-(NPR + SACK + NPG)

T2 → UBCD SERVICE BR ← 1
DISABLE NPG'S

ASSERT BUS GRANT ON APPROPRIATE LEVEL AND CLEAR UBCD SERVICE BR F.F.

WAIT FOR BUS SACK FROM FROM DEVICE

-SACK

10μ SEC: NO SACK TIME OUT

BUS SACK

WAIT 75NS AND THEN CLEAR GRANT

WAIT FOR BUS INTR AND VECTOR OR BUS BBSY TO GO AWAY; SERVICE NPR'S WHEN -(SACK + GRANT)

-(SACK+BUSY)

BUS INTR

RESTART CLOCK AND DESCEW VECTOR

RESTART TIMING; CLEAR BUS GRANT IF NO SACK TIME OUT

T1 → CLK VECTOR INTO BR

ENTER NEXT ROM STATE

T1 → CLOCK ROM OUTPUT BUFFER; RACC UMSC ... BR EQUAL 5+7

T2 → SEG DLY — SEGMENTATION OPTION PRESENT AND ENABLED: WAIT 90NS FOR ADDRESS RELOCATION; IF ABSENT OR DISABLED: NORMAL TIMING. — SEGMENTATION RELOCATION OR PROTECTION ERROR

T3 → FAST BUS DEVICES AND SOLID STATE MEORY DECODE PHYSICAL ADRS. LINES

SERVICE ALL EXISTING NPR'S; TAKE UNIBUS CONTROL, ASSERT ADRS AND CONTROL LINES, START ADRS DESCEW

TMCE BUST OUT AT TS3 SETS UBCA GET BUS F.F. UBCA GET BUS (1)* -(NPR +NPG + BUS BBSY+D SACK): UBCA CP BUSY ← 1

CHECK FOR PARITY ERRORS ODD ADDRESS ERRORS AND STACK LIMIT ERRORS IF APPLICABLE.

NO ERRORS

ERROR DETECTED SERVICE AT T3 OF PAUSE STATE

FAST BUS OR SOLID STATE MEM ADRS BUS END

T1 → PAUSE — CLOCK ROM OUTPUT BUFFER; RACB UBSDØ1=1 LOAD BR IF DATO* RACA UBRK (MAY HAVE BEEN DONE IN PREVIOUS STATE

T2 → RELINQUISH UNIBUS CONTROL; CLEAR UBCA CP BUSY F.F

TMCF FAST* TS2=UBCB CLR UNI: UBCA GET BUS ← Ø UBCA CP BUSY ← Ø ABANDON UNIBUS OPERATION.

T3 → SEND CONTROL OK TO SOLID STATE MEM — TMCE PAUSES * T3: UBCA CONTROL OK ← 1

T5 → STOP TIMING IF SOLID STATE MEMORY AND WAIT FOR DATA AND MEM SYNC. — BIPOLAR MEMORY STOPS TIMING ONLY IF IT IS BUSY WHEN BUST OUT IS ISSUED.

T1 → TAKE DATA IF DATI CLK BR; CLK IR IF FET.1; DROP CONTROL OK — TIGC T1* RACA UBRK: UBCB CLK BR(ALSO DAPA) TIGC T1: UBCA CONTROL OK ← Ø

BEND — RACC UBCT ØØ:Ø2 EQUAL 7

RELINQUISH UNIBUS CONTROL; CLEAR UBCA CP BUSY F.F.

PAUSE — RACB UBSDØ1=1 LOAD BR IF DATO*

RESTART UNIBUS ADRS DESKEW FOR DATO* CLK BR FINISH DESKEW FOR ALL OTHERS* ASSERT MSYN UPON COMPLETION

RACA UBRK*(TMCE DATO BUS OP +TMCE BSCPE): UBCB CLR DESKEW AT T2.

UBCA GET BUS ← Ø; WAIT FOR SSYN + TIMEOUT — STOP TIMING GEN IN TS2 AND WAIT FOR UBCA SSYN RESTART

NO SSYN (UBCB TIMEOUT)

RACB UBSDØØ:Ø1=3 BUS LONG PAUSE

STOP TIMING GEN IN TS5 FINISH 75NS DATA DESKEW TAKE DATA AT T4 VIA UBCB BUS LOAD IF DATI, CLEAR MSYN. DO 75NS ADDRESS DESKEW AND RESTART TIMING. CLEAR UBCA CP BUSY AT T1

DESKEW DATA FROM T3 TO NEXT T1

UBCB BUS LOAD (1) * RACA UBRK: UBCB CLK BR (ALSO DAPA)

RACB UBSD ØØ:Ø1=2 BUS PAUSE

TAKE DATA IF DATI CLK IR AND BR DROP MSYN AND START 75NS ADRS DESCEW — TIGC T1* RACA UBRK: UBCB CLK BR (ALSO DAPA)

T4 → RELINQUISH UNIBUS CONNTROL; CLEAR UBCA CP BUSY F.F. DROP ADRS AND CONTROL LINES — TIGD T94 * -(TMCE PAUSES + UBCB BUST + UBCC DATIP): UBCA CP ← Ø

PAUSE — RACB UBSDØ1 = 1

ABORT OPERATION ZAP ROM → 200 AND TRAP TO CORESPONDING VECTOR CLEAR UBCA GET BUS AND CP BUSY IF ASSERTED

TMCC ABORT* TS2: RACA ZAP

BEND — RACC UBCT ØØ:Ø2 EQUAL 7

RELINQUISH UNIBUS CONTROL; CLEAR UBCA CP BUSY F.F IGNORE ERROR CHECKS

TMCE BEND CLR AT TS3: UBCA GET BUS ← Ø UBCA CP BUSY ← Ø RACB UBSDØ1=Ø: INHIBIT ERRORS.

ENTER NEW ROM STATE

* THIS OCCURS IN SHRIØ AND EXC. ØØ FOR ODD BYTE OPERATIONS.

NOTE:
IF PROCESSOR HAS M8104 REV 'C' AND KB11-A ECO # 13 USE PRINT UBCN FOR UNIBUS TIMING.

REVISIONS | REV | CHANGE NO | CHK

BRUNING 40-522 15840
DEC FORM NO DRD 102-B

BUS CYCLE AND INTERRUPT FLOW — SLOT 12

| FIRST USED ON OPTION/MODEL | QTY | DESCRIPTION | PART NO | ITEM NO. |
|---|---|---|---|---|
| 11/45 | | PARTS LIST | | |

UNLESS OTHERWISE SPECIFIED DIMENSION IN INCHES TOLERANCES
DECIMALS: XXX ± .005, XX ± .02, .X ± .1 — ANGLES: ± 0° 30'
REMOVE BURRS AND BREAK SHARP CORNERS SURFACE QUALITY ✓
MATERIAL —
FINISH —

DRN: [signature] DATE 3/14/72
DES: [signature] DATE 4/20/72
ENG: [signature] DATE 4/20/72
PROJ ENG: [signature] DATE 4/20/72
PROD: [signature] DATE 5-1-72

digital EQUIPMENT CORPORATION MAYNARD MASSACHUSETTS

TITLE: UNIBUS & CONSOLE CONTROL (UBCK)

NEXT HIGHER ASSY: B-DD-KB11-A
SCALE —
SHEET 10 OF 14

| SIZE | CODE | NUMBER | REV |
|---|---|---|---|
| D | CS | M8106-Ø-1 | N |

DIST.

REV N | 1-0-9018W | SIZE CODE D CS | NUMBER M8106-Ø-1 | SHEET 8

This drawing and specifications, herein, are the property of Digital Equipment Corporation and shall not be reproduced or copied or used in whole or in part as the basis for the manufacture or sale of items without written permission.

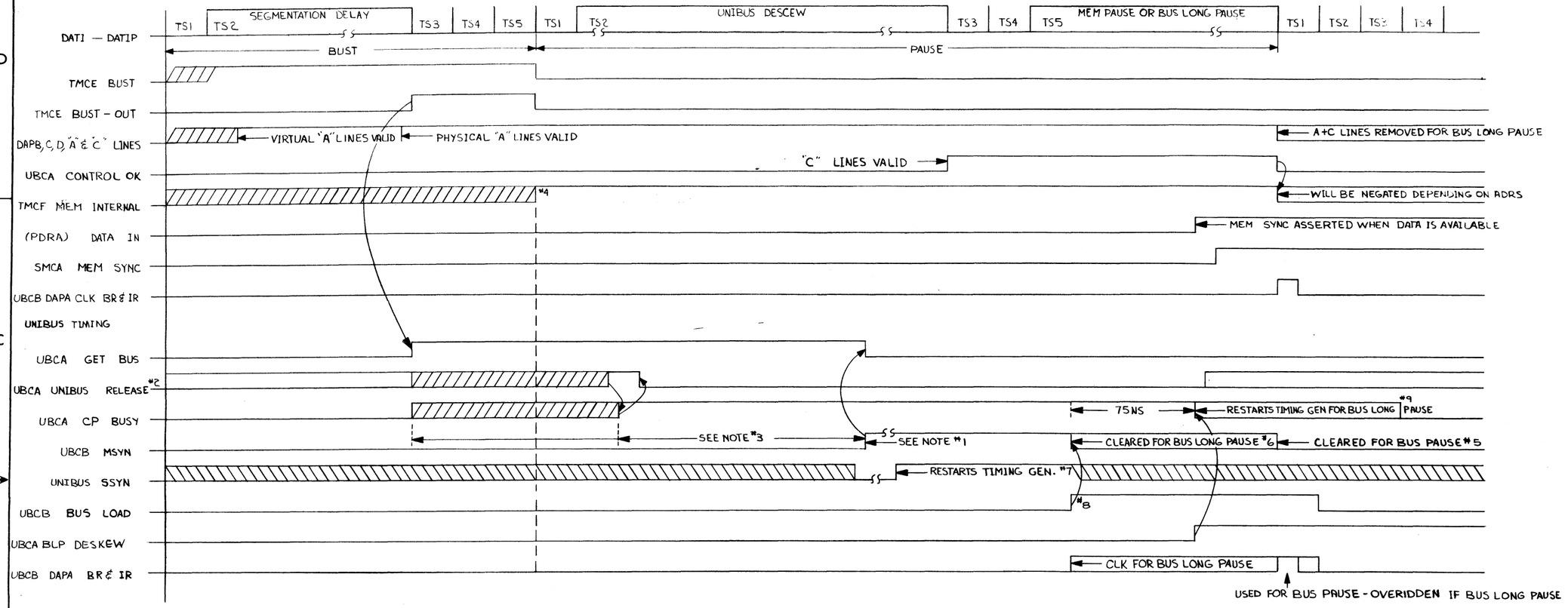


1. MSYN IS NOT SET IF ODD ADRS, SEGMENTATION, PARITY OR STACK LIMIT ERROR HAS OCCURED. ERROR CONDITION RESTARTS TIMING GENERATOR AND ROM IS FORCED TO ZAP.ØØ
2. UNIBUS RELEASE = -(NPG+NPR+DSACK+BBSY)
3. MSYN IS SET 150 NS AFTER BUSY IS SET OR WHENEVER SSYN IS NOT PRESENT AFTER THE 150NS DESCEW
4. IF ADRS IS INTERNAL OR SOLID STATE MEMORY UNIBUS CNTL LOGIC IS CLEARED, DESCEW STOPPED, MSYN NOT ASSERTED.
5. BUS PAUSE – ADRS WILL NOT BE CHANGED IMMEDIATELY UPON EXITING PAUSE STATE
6. BUS LONG PAUSE – 75NS ADRS DESCEW AFTER NEGATION OF MSYN MUST BE DONE BEFORE TIMING GEN. RESTARTS AT T5 OF PAUSE CYCLE BECAUSE "A" & C LINES WILL CHANGE UPON EXITING PAUSE STATE.
7. IF NON-EXISTANT MEMORY, TIMEOUT RESTARTS CLOCK.
8. BUS LOAD IS SET ONE CLOCK AFTER T5 TO ALLOW COMPLETION OF WRITE TO SCRATCHPAD FOR PREVIOUS CYCLE BEFOR NEW IR & BR ARE LOADED
9. CLEARED 75NS AFTER MSYN → Ø: T4 FOR BUS PAUSE

NOTE:
IF PROCESSOR HAS M8ØØ4 REV 'C' AND KBII-A ECO #13 USE PRINT UBCP FOR UNIBUS TIMING.

DATI - DATIP TIMING DIAGRAM — SLOT 12

| FIRST USED ON OPTION/MODEL | QTY. | DESCRIPTION | PART NO. | ITEM NO. |
|---|---|---|---|---|
| | | PARTS LIST | | |

UNLESS OTHERWISE SPECIFIED DIMENSION IN INCHES. TOLERANCES
DECIMALS: .XXX = .005, .XX = .02, .X = .1 — ANGLES: ±0° 30'
REMOVE BURRS AND BREAK SHARP CORNERS SURFACE QUALITY ✓
MATERIAL —
FINISH —

| | | |
|---|---|---|
| DRN. | | DATE 5/12/72 |
| CHK'D. | | DATE 11/6/72 |
| ENG. | | DATE 11/29/72 |
| PROJ. ENG. | | DATE 11/6/72 |
| PROD. | | DATE 6-1-72 |

digital EQUIPMENT CORPORATION MAYNARD MASSACHUSETTS

TITLE: UNIBUS & CONSOLE CONTROL (UBCL)

NEXT HIGHER ASSY.: B-DD-KBII-A
SCALE: —/— 1
SHEET 11 OF 14

| SIZE | CODE | NUMBER | REV. |
|---|---|---|---|
| D | CS | M8106-0-1 | N |

DIST.

| REVISIONS | REV | CHK |
|---|---|---|
| CHANGE NO | | |

BRUNING 40-522 15840
DEC FORM NO DRD 102-B

SIZE CODE D CS — NUMBER M8106-0-1 — REV N

This drawing and specifications, herein, are the property of Digital Equipment Corporation and shall not be reproduced or copied or used in whole or in part as the basis for the manufacture or sale of items without written permission.



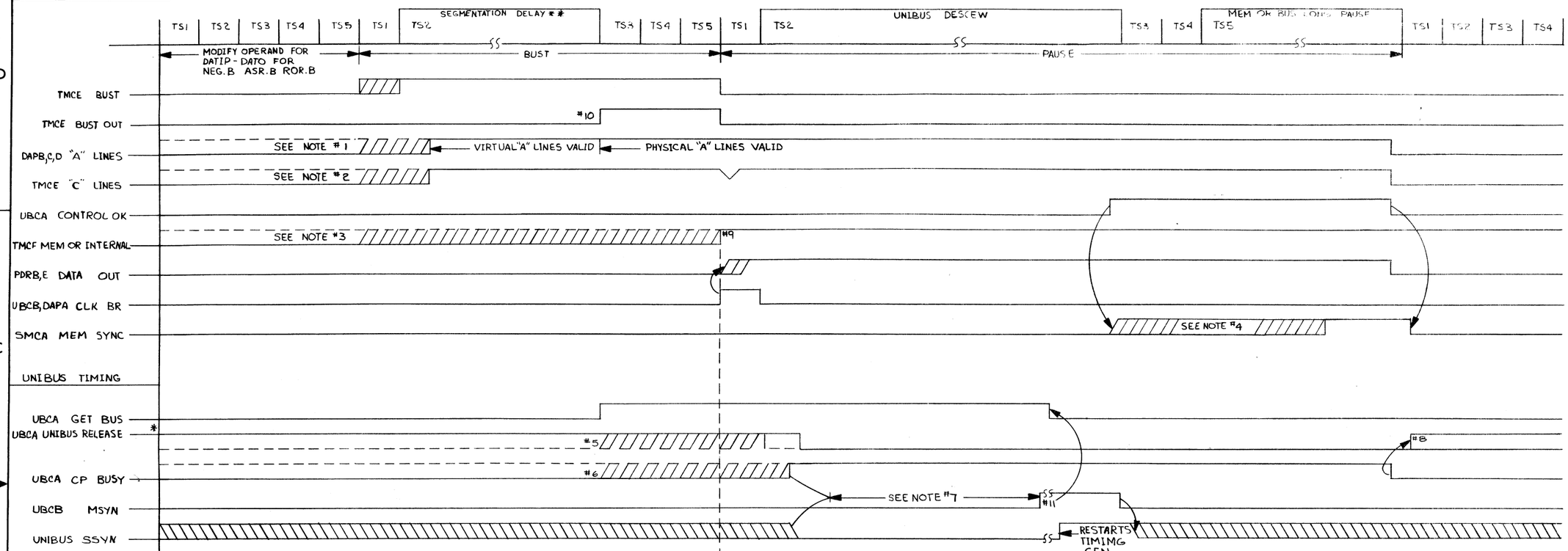


NOTES:

* UNIBUS RELEASE = −(NPR+NPG+BBSY+SACK)

** TIMING GEN: PROVIDES DELAY EQUIVELENT TO 3 TIME STATES FOR RELOCATION OF ADDRESSES IF SEGMENTATION IS PRESENT AND ENABLED

1. ADDRESS WILL NOT BE CHANGING IF DATO IS PRECEEDED BY DATIP (DOTTED LINE SHOWS DATIP)
2. CONTROL LINES WILL SHOW DATIP OR ELSE ARE INVALID UNTIL CONTROL OK
3. MEM OR INTERNAL WILL BE TRUE UPON ENTERING DATO IF ADDRESS WAS SEMI CONDUCTOR MEMORY OR INTERNAL FROM PREVIOUS DATIP
4. MEM SYNC IS ASSERTED BY SEMI CONDUCTOR MEMORY AS SOON AS DATA IS TAKEN-IF DATA IS TAKEN AND MEM SYNC ASSERTED PRIOR TO T5 OF THE PAUSE CYCLE TIMING GENERATOR IS NOT STOPPED IN T5
5. UNIBUS RELEASE WILL NOT BE TRUE IF PREVIOUS OPERATION WAS A DATIP TO A UNIBUS ADDRESS.
6. CP BUSY WILL BE ASSERTED UPON ENTRY INTO DATO IF PREVIOUS OPERATION WAS A DATIP TO A UNIBUS ADDRESS
7. DESKEW FOR "A" "C" "D" LINES IS 150NS STARTING WHEN CP BUSY IS SET AND SSYN FROM THE PREVIOUS BUS OPERATION IS NEGATED.
8. UNIBUS RELEASE BECOMES TRUE IF NO NPR DEVICE HAS BEEN GIVEN CONTROL OR IS REQUESTING PRIOR TO CP BSY GETING CLEARED
9. IF ADDRESS IS SEMI CONDUCTOR MEMORY OR INTERNAL, UNIBUS LOGIC IS CLEARED DESKEW IS STOPPED AND MSYN IS NOT ASSERTED.
10. BUST OUT IS INHIBITED IN IRD ØØ FOR CONDITIONAL BUST (MSC=5) IF BIN * SM123 + BR INST * BRQ TRUE + DM123 * −(BIN * SM6 + BR INSTR)
11. MSYN IS NOT SET IF AN ODD ADRS, STACK LIMIT RED SEGMENTATION OR PARITY ERROR HAS OCCURED

NOTE:
IF PROCESSOR HAS M8104 REV C AND KB11-A ECO #13, USE PRINT UBCP FOR UNIBUS TIMING.

NOTE:
1. ALL SIGNALS ARE SHOWN TRUE WHEN HIGH

DATO TIMING DIAGRAM — SLOT 12

| | | | |
|---|---|---|---|
| FIRST USED ON OPTION/MODEL: 11/45 | QTY. | DESCRIPTION | PART NO. / ITEM NO. |
| | PARTS LIST | | |
| UNLESS OTHERWISE SPECIFIED DIMENSION IN INCHES TOLERANCES<br>DECIMALS: .XXX ± .005, .XX ± .02, .X ± .1; ANGLES: ± 0° 30'<br>REMOVE BURRS AND BREAK SHARP CORNERS SURFACE QUALITY ✓ | DRN. | DATE 3/30/72 | digital EQUIPMENT CORPORATION MAYNARD MASSACHUSETTS |
| | CHK'D. | DATE 4/4/72 | |
| | ENG. | DATE 4/20/72 | TITLE: UNIBUS & CONSOLE CONTROL (UBCM) |
| | PROJ. ENG. | DATE 4/20/72 | |
| | PROD. | DATE 5/1/72 | |
| MATERIAL | NEXT HIGHER ASSY. B-DD-KB11-A | | SIZE D; CODE CS; NUMBER M8106-Ø-1; REV. N |
| FINISH | SCALE | | |
| | SHEET 12 OF 14 | | DIST. |

BRUNING 40-522 15840 — DEC FORM NO ORD 102-B

| REV | REVISIONS | CHANGE NO | CHK |
|---|---|---|---|

REV N | NUMBER M8106-Ø-1 | SIZE D | CODE CS

This drawing and specifications, herein, are the property of Digital Equipment Corporation and shall not be reproduced or copied or used in whole or in part as the basis for the manufacture or sale of items without written permission.



WAT.2Ø
BRK.ØØ
} INTR FAILS RACB UBSD ØØ:Ø1=1

-(BR4 + BR5 + BR6 + BR7)

BR4 + BR5 + BR6 + BR 7

SERVICE ALL EXISTING NPR'S

NPR + SACK + NPG

-(NPR + SACK + NPG)

T2 → UBCD SERVICE BR ←1
DISABLE NPG'S

ASSERT BUS GRANT ON APPROPRIATE LEVEL AND CLEAR UBCD SERVICE BR F.F.

WAIT FOR BUS SACK FROM FROM DEVICE

-SACK

10μ SEC: NO SACK TIME OUT → RESTART TIMING; CLEAR BUS GRANT IF NO SACK TIME OUT

BUS SACK

WAIT 75 NS AND THEN CLEAR GRANT

WAIT FOR BUS INTR AND VECTOR OR BUS BBSY TO GO AWAY; SERVICE NPR'S WHEN -(SACK + GRANT)

-(SACK + BUSY)

BUS INTR

RESTART CLOCK AND DESCEW VECTOR

T1 → CLK VECTOR INTO BR → ENTER NEXT ROM STATE

T1 → BUST — CLOCK ROM OUTPUT BUFFER; RACC UMSC ØØ:Ø2 EQUAL 5+7

T2 → SEG DLY — SEGMENTATION OPTION PRESENT AND ENABLED: WAIT 90NS FOR ADDRESS RELOCATION; IF ABSENT OR DISABLED: NORMAL TIMING.

SEGMENTATION RELOCATION OR PROTECTION ERROR

T3 → FAST BUS DEVICES AND SOLID STATE MEORY DECODE PHYSICAL ADRS. LINES

SERVICE ALL EXISTING NPR'S; TAKE UNIBUS CONTROL, ASSERT ADRS AND CONTROL LINES, START ADRS DESCEW

TMCE BUST OUT AT TS3 SETS UBCA GET BUS F.F. UBCA GET BUS (1) * -(NPR +NPG + BUS BBSY+D SACK): UBCA CP BUSY ←1

CHECK FOR PARITY ERRORS ODD ADDRESS ERRORS AND STACK LIMIT ERRORS IF APPLICABLE.

NO ERRORS

ERROR DETECTED
SERVICE AT T3 OF PAUSE STATE

FAST BUS OR SOLID STATE MEM ADRS

BUS END

T1 → PAUSE — CLOCK ROM OUTPUT BUFFER; RACB UBSDØ1=1 LOAD BR IF DATO * RACA UBRK (MAY HAVE BEEN DONE IN PREVIOUS STATE

T2 → RELINQUISH UNIBUS CONTROL; CLEAR UBCA CP BUSY F·F

TMCF FAST * TS2 = UBCB CLR UNI: UBCA GET BUS ←Ø UBCA CP BUSY ←Ø ABANDON UNIBUS OPERATION.

T3 → SEND CONTROL OK TO SOLID STATE MEM — TMCE PAUSES * T3: UBCA CONTROL OK ←1

TS → STOP TIMING IF SOLID STATE MEMORY AND WAIT FOR DATA AND MEM SYNC. — BIPOLAR MEMORY STOPS TIMING ONLY IF IT IS BUSY WHEN BUST OUT IS ISSUED.

T1 → TAKE DATA IF DATI CLK BR: CLK IR IF FET.1; DROP CONTROL OK — TIGC T1 * RACA UBRK: UBCB CLK BR (ALSO DAPA) TIGC T1: UBCA CONTROL OK ←Ø

BEND — RACC UBCT ØØ:Ø2 EQUAL 7

RELINQUISH UNIBUS CONTROL; CLEAR UBCA CP BUSY F.F.

PAUSE — RACB UBSDØ1=1 LOAD BR IF DATO *

RESTART UNIBUS ADRS DESKEW FOR DATO * CLK BR FINISH DESKEW FOR ALL OTHERS & ASSERT MSYN UPON COMPLETION

RACA UBRK * (TMCE DATO BUS OP + TMCE BSCP2): UBCB CLR DESKEW AT T2.

UBCA GET BUS ←Ø; WAIT FOR SSYN + TIMEOUT — STOP TIMING GEN IN TS2 AND WAIT FOR UBCA SSYN RESTART

NO SSYN (UBCB TIMEOUT)

RACB UBSD ØØ:Ø1=3

BUS LONG PAUSE

DESKEW DATA FROM SSYN TO T3 VIA SYNCRONIZER. TAKE DATA AT T3 TO BUFFER, DESKEW ADDRESS & CONTROL T3 TO T1. DROP MSYN T3.

MOVE DATA FROM BUFFER TO BR IF DATI AT T1, HOLD ADDRESS AND CONTROL TO T4 IF BUS PAUSE

TIGC T1 * RACA UBRK: UBCB CLK BR (ALSO DAPA)

TIGD TS4 * -(TMCE PAUSES + UBCB BUST + UBCC DATIP): UBCA CP ← Ø

PAUSE — RACB UBSDØ1 = 1

ABORT OPERATION ZAP ROM →2ØØ AND TRAP TO CORESPONDING VECTOR CLEAR UBCA GET BUS AND CP BUSY IF ASSERTED

TMCC ABORT * TS2: RACA ZAP

BEND — RACC UBCT ØØ:Ø2 EQUAL 7

RELINQUISH UNIBUS CONTROL; CLEAR UBCA CP BUSY F·F IGNORE ERROR CHECKS

TMCE BEND CLR AT TS3: UBCA GET BUS ←Ø UBCA CP BUSY ←Ø RACB UBSDØ1=Ø: INHIBIT ERRORS.

ENTER NEW ROM STATE

* THIS OCCURS IN SHRIØ AND EXC. ØØ FOR ODD BYTE OPERATIONS.

BUS CYCLE AND INTERRUPT FLOW — SLOT 12

| FIRST USED ON OPTION/MODEL | QTY. | DESCRIPTION | PART NO. | ITEM NO. |
|---|---|---|---|---|
| 11/45 | PARTS LIST | | | |

UNLESS OTHERWISE SPECIFIED DIMENSION IN INCHES. TOLERANCES
DECIMALS: .XXX = .005, .XX = .02, .X = .1 — ANGLES: ±0° 30'
REMOVE BURRS AND BREAK SHARP CORNERS SURFACE QUALITY ✓
MATERIAL
FINISH

| | | |
|---|---|---|
| DRN. | DATE | 3/14/72 |
| CHK'D. | DATE | 4/10/72 |
| ENG. | DATE | 4/26/72 |
| PROJ. ENG. | DATE | 4/26/72 |
| PROD. | DATE | 5/2/72 |

digital EQUIPMENT CORPORATION MAYNARD MASSACHUSETTS

TITLE: UNIBUS & CONSOLE CONTROL (UBCN)

NEXT HIGHER ASSY.: B-DD-KB11-A
SCALE
SHEET 13 OF 14

| SIZE | CODE | NUMBER | REV. |
|---|---|---|---|
| D | CS | M8106-Ø-1 | N |

DIST.

REVISIONS | REV | CHANGE NO | CHK

BRUNING 40-522 15840

DEC FORM NO. DRD 102-B

SIZE CODE D CS M8106-Ø-1 REV N

THIS DRAWING AND SPECIFICATIONS HEREIN ARE THE PROPERTY OF DIGITAL EQUIPMENT CORPORATION AND SHALL NOT BE REPRODUCED OR COPIED OR USED IN WHOLE OR IN PART AS THE BASIS FOR THE MANUFACTURE OR SALE OF ITEMS WITHOUT WRITTEN PERMISSION
COPYRIGHT © DIGITAL EQUIPMENT CORPORATION"

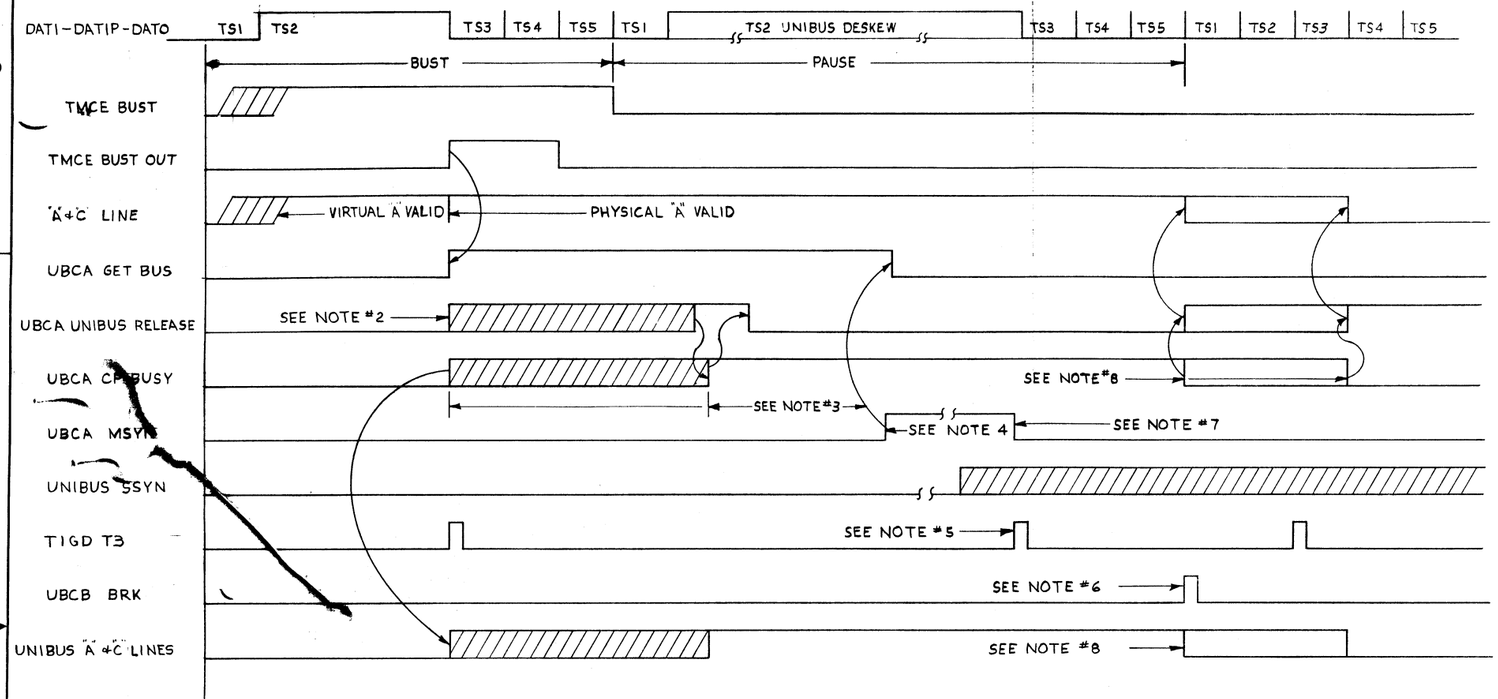


NOTES:

#1 MSYN IS NOT SET IF ODD ADDRESS, KTIIC, PARITY OR STACK LIMIT HAS OCCURED. ERROR CONDITION RESTARTS TIMING GEN. AND ROM IS FORCED TO ZAP.00

#2 UNIBUS RELEASE = -(NPG + NPR + SACK + B BUSY)

#3 MSYN IS SET 150 NS AFTER CP BUSY OR WHENEVER SSYN IS NOT PRESENT AFTER 150 NS DESKEW.

#4 IF ADRS IS INTERNAL OR SOLID STATE MEMORY, UNIBUS CONTROL LOGIC IS CLEARED, DESKEW STOPPED, MSYN NOT ASSERTED.

#5 T3 STROBES UNIBUS DATA TO BUS BUFFER REGISTER EVERY T3. FOR DATI-DATIP THE BR CLOCK IS NEXT T1

#6 BRK IS DEPENDENT ON ROM TO LOAD BUS TO BR.

#7 T5 NS DESKEW FOR MSYN IS OBTAINED BY THE FACT THAT SSYN MUST GO THROUGH 2 RANKS OF SYNCRONIZATION

#8 FOR BUS LONG PAUSE ADDRESS + CONTROL IS DESKEWED FROM T3 TO T1. FOR BUS PAUSE THEY ARE HELD TO TS4 OF THE NEXT ROM CYCLE.

SLOT 12

| FIRST USED ON OPTION/MODEL | QTY. | DESCRIPTION | PART NO. | ITEM NO. |
|---|---|---|---|---|
| 11/45 | | PARTS LIST | | |

UNLESS OTHERWISE SPECIFIED DIMENSION IN INCHES
TOLERANCES
DECIMALS: .xxx = .005, .xx = .02, .x = .1 | ANGLES: ±0 30'
REMOVE BURRS AND BREAK SHARP CORNERS SURFACE QUALITY √

| | | |
|---|---|---|
| DRN. R. Hale | DATE 5/24/73 | digital EQUIPMENT CORPORATION MAYNARD MASSACHUSETTS |
| CHK'D | DATE 5/29/73 | |
| ENG. | DATE 5/29/73 | TITLE: UNIBUS & CONSOLE CONTROL (UBCP) |
| PROJ. ENG. | DATE 5-29-73 | |
| PROD. | DATE 5/30/73 | |

MATERIAL: —
FINISH: —
NEXT HIGHER ASSY.: B-CD-KB11-A
SCALE: —
SHEET 14 OF 14

| SIZE | CODE | NUMBER | REV. |
|---|---|---|---|
| D | CS | M8106-0-1 | N |

DIST.

This drawing and specifications, herein, are the property of Digital Equipment Corporation and shall not be reproduced or copied or used in whole or in part as the basis for the manufacture or sale of items without written permission

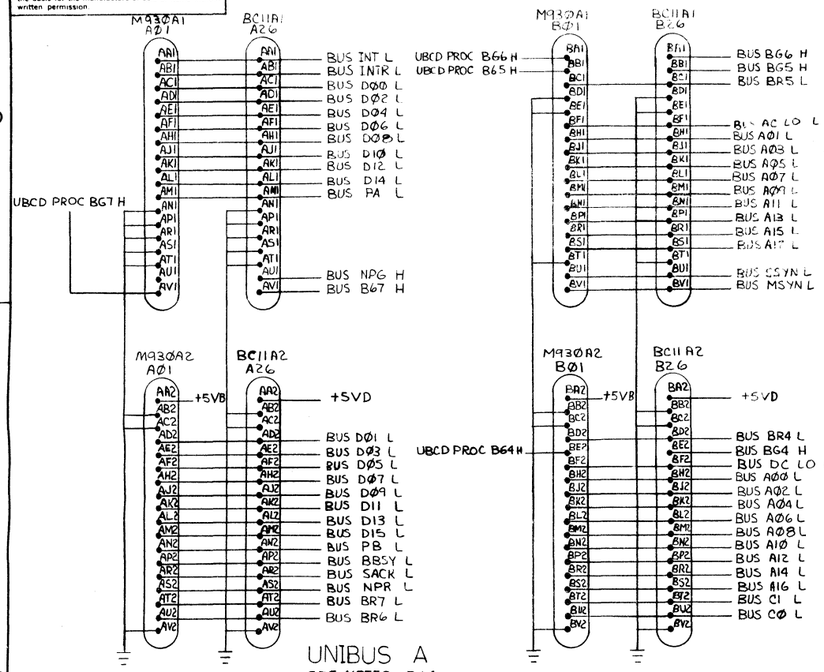





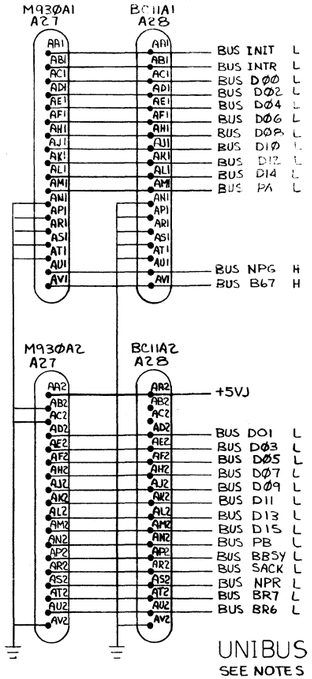


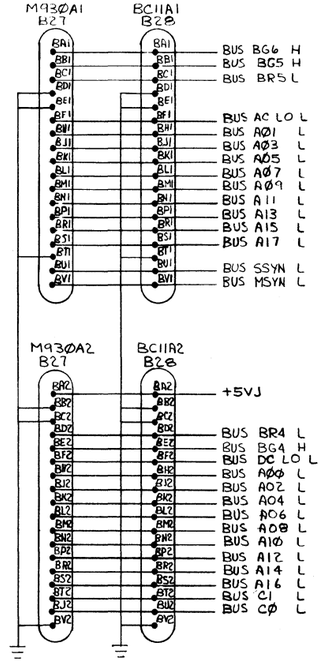


NOTES:

1. UNIBUS A IS A CONVENTIONAL UNIBUS WITH PRIORITY ARBITRATION CONTAINED WITHIN THE KB11-A
2. UNIBUS B IS TRANSPARENT TO THE KB11-A IN THAT NO PRIORITY ARBITRATION IS PRESENT, SEMICONDUCTOR MEMORY (UNIBUS PORT) IS TIED TO BUS B.
3. TO CONNECT SEMICONUCTOR MEMORY TO UNIBUS A IN SINGLE BUS CONFIGURATION BUSA (AB26) IS CONNECTED TO BUS B (AB27) VIA M9200 AND BUS B OUT(AB28) BECOMES UNIBUS OUT.
4. BUS A SIGNAL PREFIXES IN KB11-A REFER TO UNIBUS A IN MULTIBUS CONFIGURATIONS,
5. BUS B SIGNAL PREFIXES IN MS11 REFER TO UNIBUS B IN MULIBUS CONFIGURATIONS.
6. C0IR2 - C0IV2 MUST BE DELETED ON BACKPANEL WHEN KW11 IS INSTALLED.
7. WHEN NO DEVICE IS INSERTED G727 MUST BE BE PLACED IN THE 'D' SLOT TO JUMPER GRANT LINES TO UNIBUS OUT.

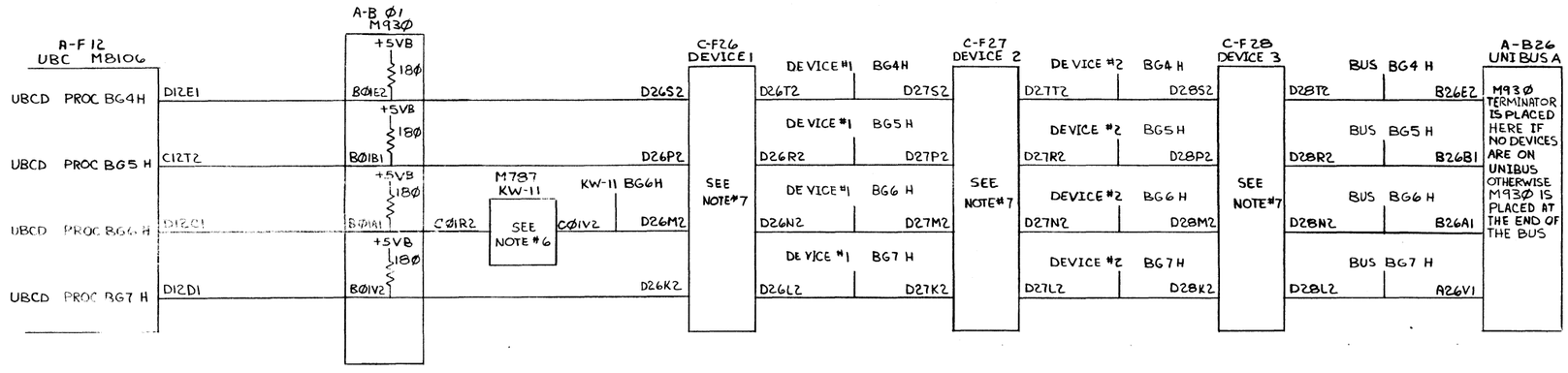


| FIRST USED ON OPTION/MODEL | QTY. | DESCRIPTION | PART NO. | ITEM NO. |
|---|---|---|---|---|
| 11/45 | | PARTS LIST | | |

UNLESS OTHERWISE SPECIFIED DIMENSION IN INCHES. TOLERANCES

| DECIMALS | ANGLES |
|---|---|
| .XXX = .005 .XX = .02 .X = .1 | ±0° 30' |

REMOVE BURRS AND BREAK SHARP CORNERS SURFACE QUALITY ✓

MATERIAL —

FINISH —

| | | |
|---|---|---|
| DRN. | | DATE 3/5/72 |
| CHK'D. | | DATE 3/5/72 |
| ENG. | | DATE 4/29/72 |
| PROJ. ENG. | | DATE 4/29/72 |
| PROD. | | DATE 4-21-72 |

NEXT HIGHER ASSY. B-DD-KB11-A

SCALE —

SHEET 1 OF 1

digital EQUIPMENT CORPORATION MAYNARD MASSACHUSETTS

TITLE: BUS CABLES AND GRANT CHAIN (BUS)

| SIZE | CODE | NUMBER | REV. |
|---|---|---|---|
| D | IC | KB11-A-BG | |

DIST.

| REVISIONS | REV |
|---|---|
| CHANGE NO | |
| CHK | |

BRUNING 40-522 15840

DEC FORM NO DRD 102-B

SIZE D CODE IC NUMBER KB11-A-BG REV

THIS SCHEMATIC IS FURNISHED ONLY FOR TEST AND MAINTENANCE PURPOSES. THE CIRCUITS ARE PROPRIETARY IN NATURE AND SHOULD BE TREATED ACCORDINGLY.
COPYRIGHT 1969 BY DIGITAL EQUIPMENT CORPORATION

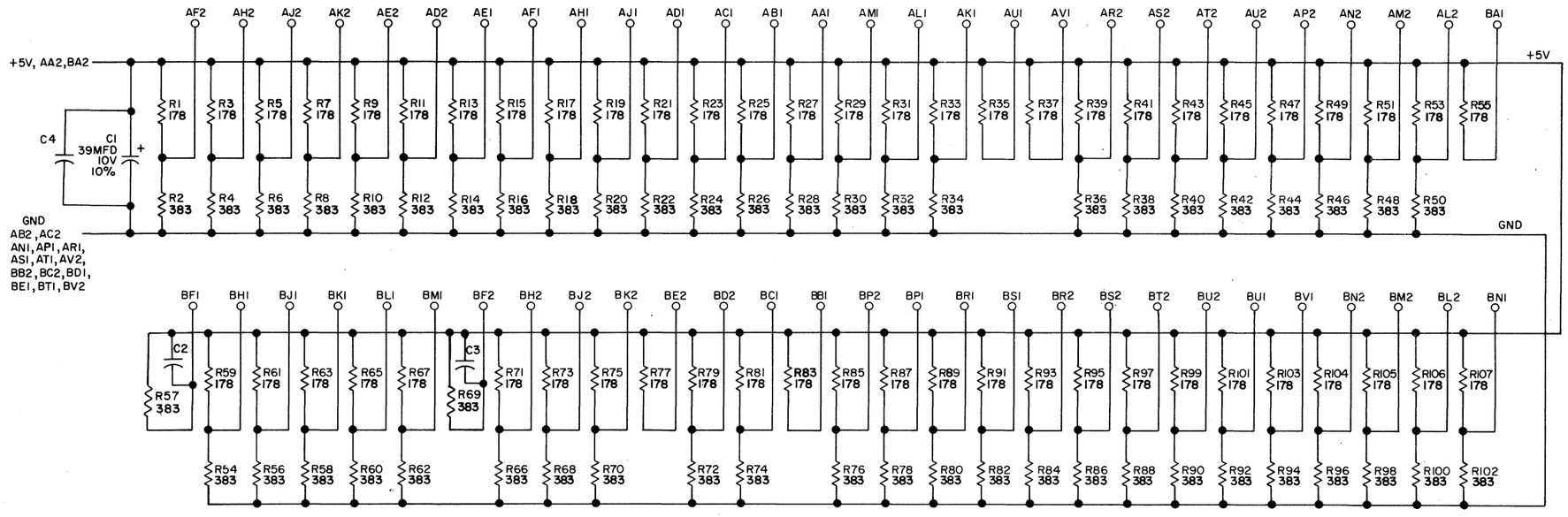


UNLESS OTHERWISE INDICATED:
RESISTORS ARE 1/4W, 1%
CAPACITORS ARE .001 UF, 250V, 20%

| REVISIONS | | | |
|---|---|---|---|
| CHK | CHG NO. | REV. | |
| [illegible] | 00001 | A | |
| [illegible] | 00002 | B | |
| [illegible] | 00003 | C | |
| b. j. haile 5-29-73 | | | |
| P. JANSON | | | |

| | | |
|---|---|---|
| DRN. BUTLER | DATE 11-21-69 | |
| CHK'D | DATE | |
| ENG | DATE | |
| PROD. | DATE | |

| TRANSISTOR & DIODE CONVERSION CHART | | | |
|---|---|---|---|
| DEC | EIA | DEC | EIA |
| | | | |

digital EQUIPMENT CORPORATION MAYNARD, MASSACHUSETTS

TITLE: BUS TERMINATOR M930

| SIZE | CODE | NUMBER | REV. |
|---|---|---|---|
| C | CS | M930-0-1 | C |

PRINTED CIRCUIT REV. C

| SIZE | CODE | NUMBER | REV. |
|---|---|---|---|
| C | CS | M930-0-1 | C |

DEC FORM NO.
DRC 102

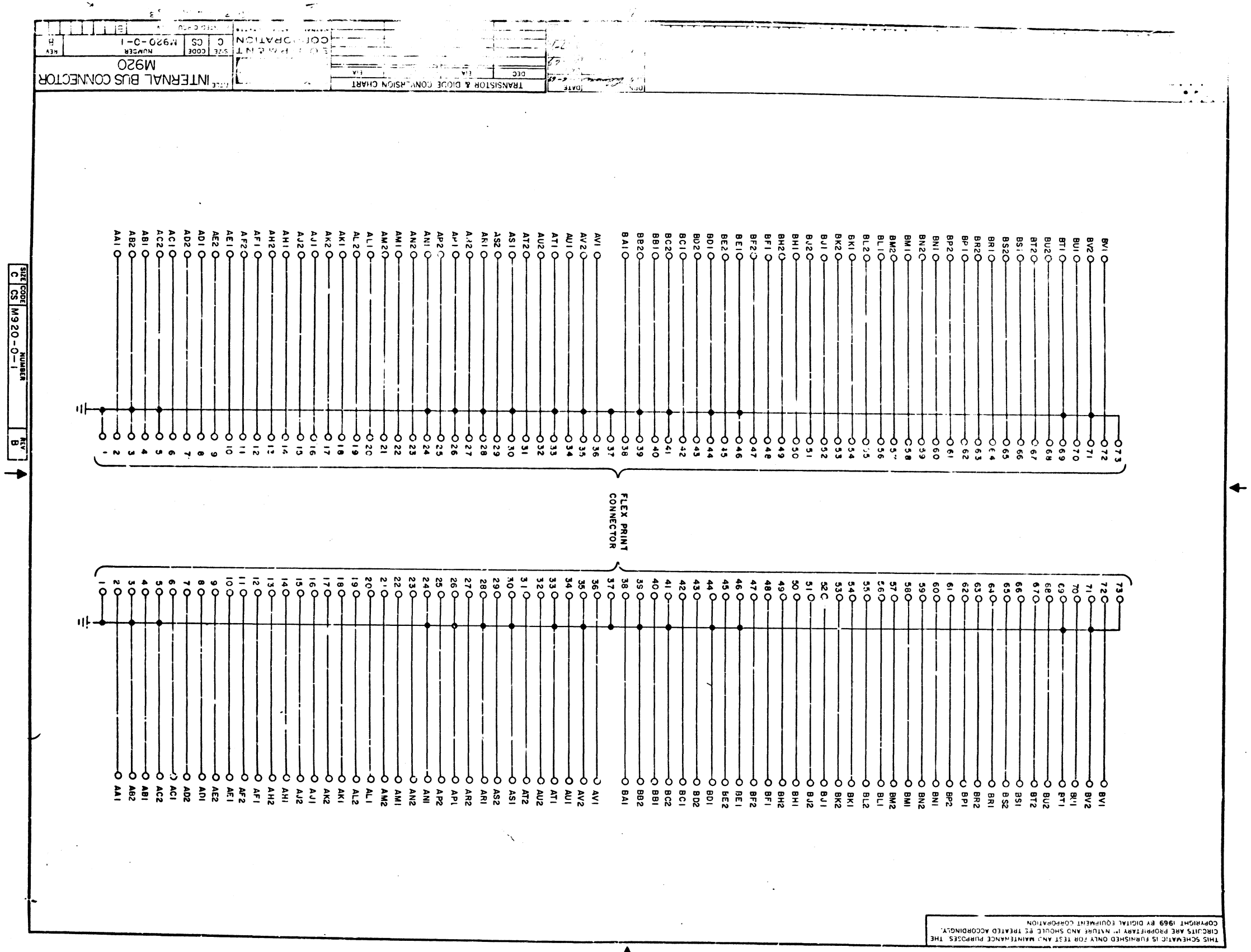
INTERNAL BUS CONNECTOR
M920
SIZE C
CODE CS
NUMBER M920-0-1
REV B
TRANSISTOR & DIODE CONVERSION CHART
FLEX PRINT CONNECTOR
BV1 BV2 BU1 BT1 BU2 BT2 BS1 BS2 BR1 BR2 BP1 BP2 BN1 BN2 BM1 BM2 BL1 BL2 BK1 BK2 BJ1 BJ2 BH1 BH2 BF1 BF2 BE1 BE2 BD1 BD2 BC1 BC2 BB1 BB2 BA1
AV1 AV2 AU1 AU2 AT1 AT2 AS1 AS2 AR1 AR2 AP1 AP2 AN1 AN2 AM1 AM2 AL1 AL2 AK1 AK2 AJ1 AJ2 AH1 AH2 AF1 AF2 AE1 AE2 AD1 AD2 AC1 AC2 AB1 AB2 AA1
THIS SCHEMATIC IS FURNISHED ONLY FOR TEST AND MAINTENANCE PURPOSES. THE CIRCUITS ARE PROPRIETARY IN NATURE AND SHOULD BE TREATED ACCORDINGLY.
COPYRIGHT 1969 BY DIGITAL EQUIPMENT CORPORATION

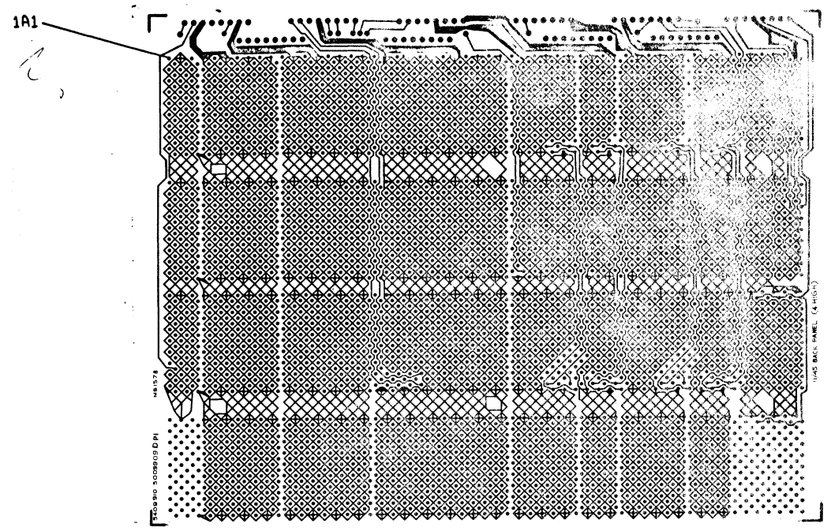


SOLDER SIDE (SIDE 2)

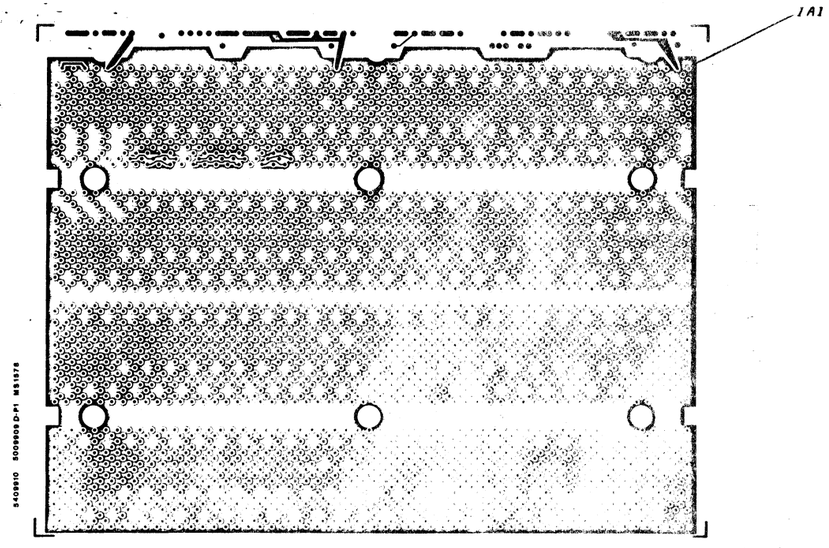


BLOCK SIDE (SIDE 1)

| QTY | REF DESIGNATION | DESCRIPTION | PART NO. | ITEM NO. |
|---|---|---|---|---|
| | | ASSY-DRILLING HOLE LAYOUT | D-AH-5409910-0-5 | 5 |
| | | 11/45 BACK PANEL | E-1A-50099090-0 | 4 |
| REF | | X-Y COORDINATE HOLE LOC | K-CO-5409910-0-4 | 3 |
| REF | | MODULE HISTORY | E-MH-5409910-0-6 | 2 |
| 1 | | ETCHED CIRCUIT BOARD | 5009909 | 1 |

PARTS LIST

ETCH BOARD REV D

| IC TYPE | GND | +5V |
|---|---|---|
| GND AND 5V ARE USUALLY PIN 7 AND 14 RESPECTIVELY EXCEPTIONS ARE STATED ABOVE | | |

IC PIN LOCATIONS

| ITEM NO. | AWG | FROM PT | TO PT |
|---|---|---|---|

JUMPER LIST

| DEC NO | ECA NO. | DEC NO. | ECA NO. |
|---|---|---|---|

SEMICONDUCTOR CONVERSION CHART

| REVISIONS | | | | |
|---|---|---|---|---|
| CHK | CHANGE NO. | ORIGINATED | | REV |
| J. SWANSON | 5409910-00001 | 6/17/72 | | A |
| R. J. Bo-16 | | 6/17/72 | | |
| J. SWANSON | | 6/17/72 | | C |
| T. JOHNSON | | 6/17/72 | | D |

DRN R. Wilson DATE 5-72
CHK D. Ladd DATE 7/72
ENG DATE
PROJ ENG DATE
PROD DATE
NEXT HIGHER ASSY E-AD-7006733-0-0
SCALE 1/1
SHEET 1 OF 1

DIGITAL EQUIPMENT CORPORATION
MAYNARD, MASSACHUSETTS

TITLE
CIRCUIT SCHEMATIC

SIZE E | CODE | NUMBER 5409910-0-1 | REV. D
DIST

5409910-0-1 D

DEC 10PM NO. DMS 500

This drawing and specifications, herein, are the property of Digital Equipment Corporation and shall not be reproduced or copied or used in whole or in part as the basis for the manufacture or sale of items without written permission.

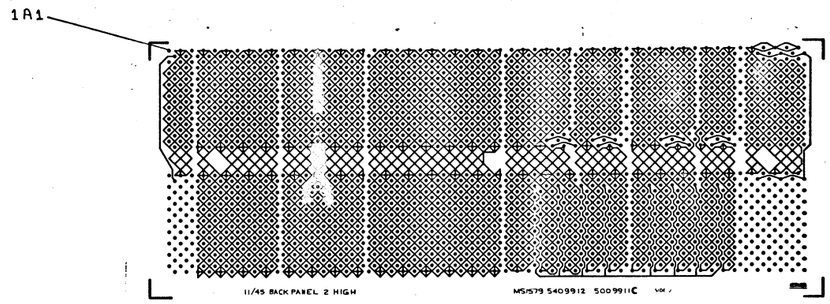


SOLDER SIDE (SIDE 2)

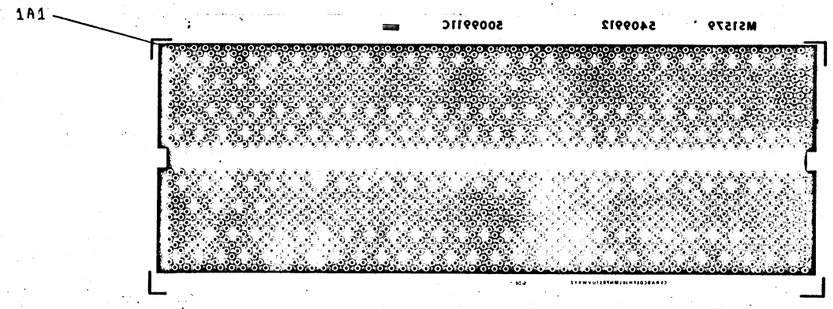


BLOCK SIDE (SIDE 1)

| IC TYPE | GND | +5V |
|---|---|---|
| GND AND 5V ARE USUALLY PIN 7 AND 14 RESPECTIVELY EXCEPTIONS ARE STATED ABOVE | | |

IC PIN LOCATIONS

| ITEM NO. | AWG | FROM PT | TO PT |
|---|---|---|---|

JUMPER LIST

| REF | | X-Y COORDINATE HOLE LOC | K-CO-5409912-0-5 | 3 |
|---|---|---|---|---|
| REF | | MODULE ECO HISTORY | 8-MH-5409912-0-4 | 2 |
| 1 | | ETCHED CIRCUIT BOARD | D-IA-5009911-0-0 | 1 |
| QTY | REF DESIGNATION | DESCRIPTION | PART NO. | ITEM NO. |

PARTS LIST

ETCH BOARD REV C

| DEC NO. | EIA NO. | DEC NO. | EIA NO. |
|---|---|---|---|

SEMICONDUCTOR CONVERSION CHART

| REV | CHANGE NO. | CHK |
|---|---|---|
| A | ORIGINATED | J.SWANSON 12-6-72 |
| B | 5409912-0000-MA1 | A.J. Nuss 12-6-72 |
| C | | |

REVISIONS

DRN J.SWANSON 12-6-72
CHK D. Nuss 12/7/72
ENG S. Swanson 12/7/72
PROJ. ENG. D. Nuss 12/8/72
PROG S. Swanson 12/10/72
NEXT HIGHER ASSY E-AD-7008753-0-0
SCALE 1 X 1
SHEET 1 OF 1

DIGITAL EQUIPMENT CORPORATION MAYNARD, MASSACHUSETTS

TITLE
CIRCUIT SCHEMATIC

SIZE CODE NUMBER REV.
E ECS5409912-0-1 C
DIST.

DRAWING NO. ECS5409912-0-1 REV C

The drawing and specifications, herein, are the property of Digital Equipment Corporation and shall not be reproduced or copied or used in whole or in part as the basis for the manufacture or sale of items without written permission.

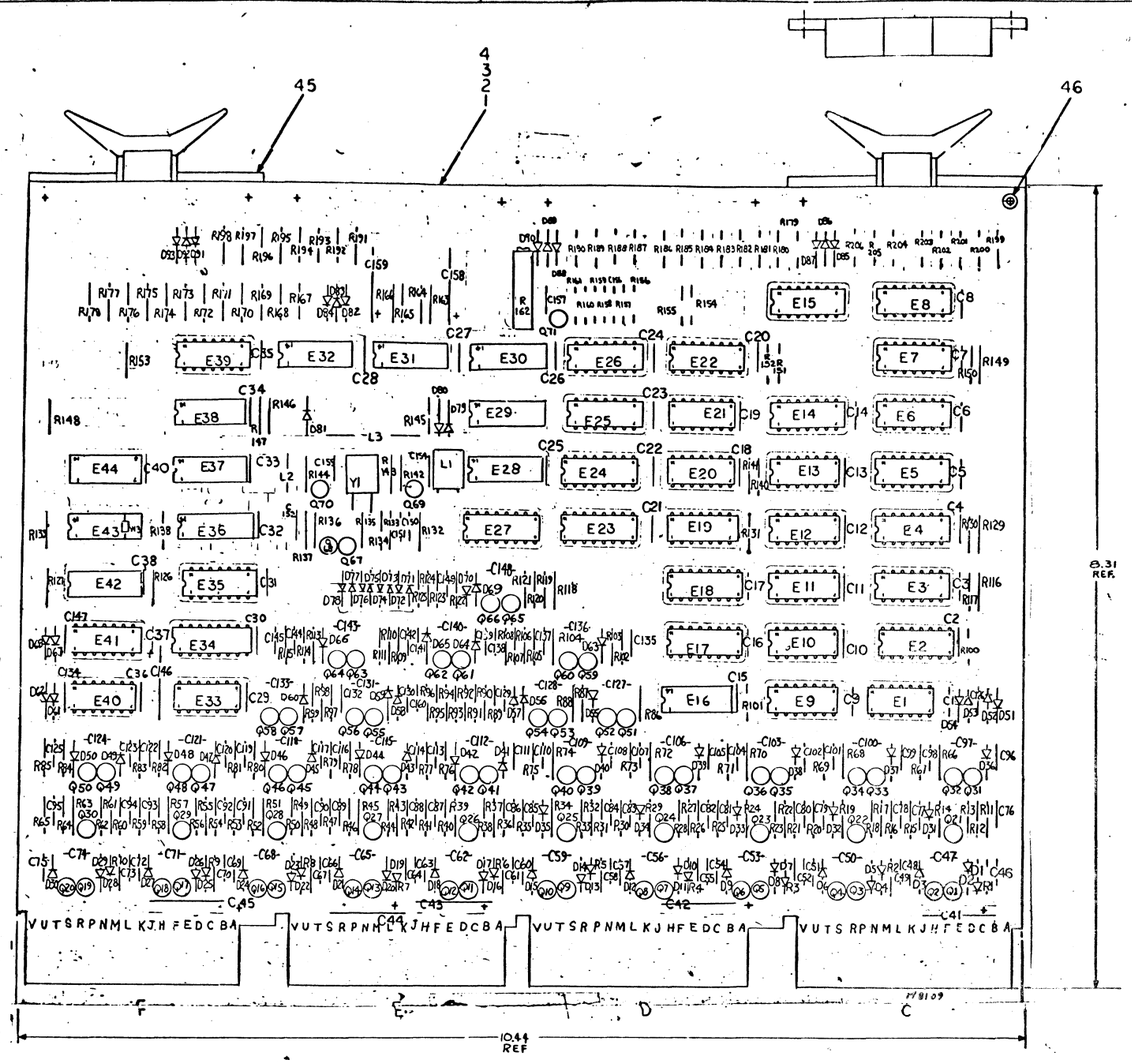


NOTES:
1. UNLESS OTHERWISE NOTED RESISTANCE IS IN Ω AND CAPACITANCE IS IN PICOFARADS CAPS WITHOUT VALUE NOTED ARE .22 MFD

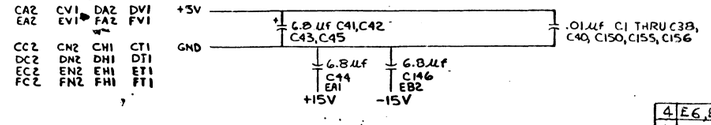


**— CAUTION —**
**NON-STANDARD DRAWING FOR SPECIAL APPLICATION**

| QTY | REF DESIGNATION | DESCRIPTION | PART NO. | ITEM NO |
|---|---|---|---|---|
| 4 | E6,E8,E15,E42 | IC DEC 74S74-45 | 1910950 | 48 |
| 1 | W3 | JUMPER INSULATED | NA | 47 |
| 8 | | EYELET #G64-7 | 9006732 | 46 |
| 4 | | HANDLE FLIP-CHIP MAGENTA | 9008337-06 | 45 |
| 1 | Y1 | CRYSTAL 33.333MHZ | 1810694-1 | 44 |
| 1 | L2 | INDUCTOR .47uh NYTRONICS WEE-WEE -0.47 | 1610999 | 43 |
| 1 | L1 | INDUCTOR .22 uH; VARIABLE NYTRONICS WEE VL .22 | 1611000 | 42 |
| 1 | L3 | INDUCTOR RFCS 33uh | 1601759 | 41 |

PARTS LIST

| QTY | REF DESIGNATION | DESCRIPTION | PART NO. | ITEM NO |
|---|---|---|---|---|
| 35 | Q1,Q3,Q5,Q7,Q9,Q11, C13,Q15,Q17,Q19,Q21, THRU Q25, C31 THRU Q40, Q51,Q54,Q56,Q58,Q69, C63,Q65,Q66,Q69,Q70 | TRANSISTOR DEC 9258 | 1505321 | 40 |
| 36 | Q2,Q4,Q6,Q8,Q10,Q12, Q14,Q16,Q18,Q20,Q24 THRU Q30, Q41 THRU Q50, C52,Q53,Q57,Q60,Q64 Q62,Q64, Q67 Q68, Q71, Q55 | TRANSISTOR DEC 3009 B | 1503100 | 39 |
| 1 | E30 | IC. DEC 74S140 | 1910546 | 38 |
| 8 | E2, E17, E18, E22, E23, E34, E35, E36 | IC. DEC 74S112 | 1910545 | 37 |
| 4 | E5, E19, E28, E24 | IC. DEC 74S74 | 1910544 | 36 |
| 4 | E11, E12, E13, E20 | IC. DEC 74S65 | 1910543 | 35 |
| 1 | E27 | IC. DEC 74S64 | 1910542 | 34 |
| 6 | E1, E9, E14, E16, E33, E40 | IC. DEC 74S40 | 1910541 | 33 |
| 2 | E32, E38 | IC. DEC 74S20 | 1910539 | 32 |
| 4 | E3, E29, E39, E44 | IC. DEC 74S11 | 1910537 | 31 |
| 5 | E4 E7 E21 E25 E37 | IC. DEC 74S04 | 1910534 | 30 |
| 4 | E10, E26, E31, E41 | IC. DEC 74S00 | 1910532 | 29 |
| 1 | R162 | RES. 1K 3/4W 10% | 2309143-07 | 28 |
| 9 | R117, R130, R151, R140, R147, R150, R151, R116, R166 | RES. 680Ω 1/4W 5% | 1301424 | 27 |
| 1 | R142 | RES. 750Ω 1/4W 5% | 1301401 | 26 |
| 13 | R66, R68, R70, R72, R74, R76, R78, R80, R82, R84, R118, R119, R120 | RES. 1.2K 1/4W 5% | 1301320 | 25 |
| 26 | R13, R15, R18, R20, R23, R25, R28, R30, R33, R35, R38, R41, R44, R47, R50, R53, R56, R59, R62, R65, R102, R104, R114, R115, R132, R158 | RES. 10Ω 1/4W 5% | 1301317 | 24 |
| 5 | R12, R11, R21, R27, R32 | RES. 15K 1/4 5% | 1300496 | 23 |
| 22 | R1 THRU R10, R40, R46, R52, R58, R64, R67, R69, R71, R113, R75, R99, R103 | RES. 4.7K 1/4 5% | 1300447 | 22 |
| 7 | R77, R79, R31, R43, R55, R56, R103 | RES. 3K 1/4 5% | 1300432 | 21 |
| 6 | R11, R14, R21, R26, R31, R143 | RES. 15K 1/4 5% | 1300391 | 20 |
| 74 | R36, R37, R42, R43, R48, R49, R54, R55, R60, R61, R67 THRU R94, R105 THRU R111, R122, R123, R124, R126, R101, R135, R139, R148, R153, R167 THRU R206 | RES. 1K 1/4 5% | 1300365 | 19 |
| 12 | R16, R24, R11, R46, R49, R56, R152, R59, R160, R161, R145 | RES. 330 1/4W 5% | 1300295 | 18 |
| 2 | R136, R145 | RES. 22.0 1/4W 5% | 1300271 | 17 |
| 6 | R100, R105, R112, R131, R154, R165 | RES. 150Ω 1/4W 5% | 1300250 | 16 |
| 11 | R10, R19, R21, R23, R31, R39, R45, R51, R57, R63, R211 | RES. 100Ω 1/4W 5% | 1300229 | 15 |
| 2 | R133, R137 | RES. 68Ω 1/4W 5% | 1300219 | 14 |
| 7 | R87, R88, R97, R134, R135, R144, R98 | RES. 47Ω 1/4W 5% | 1300202 | 13 |
| 54 | D1, D3, D9, D5, D7, D9, D13, D17, D43, D15, D16, D18, D19, D21, D22, D24, D25, D27 D28, D30, D31 THRU D56 D57, D58, D61, D62, D64, D67, D68, D69, D65, D70 | DIODE FD777 | 1103041 | 12 |
| 39 | D2, D5, D8, D11, D14, D17, D20, D23, D26, D29, D55, D54, D59, D60, D63, D66, D71 THRU D93 | DIODE D662 | 1100113 | 11 |
| 96 | C46, C47 THRU C71, C89 THRU C100, C102, C103, C105, C106, C108, C109, C111, C112, C114, C115, C117, C118, C120, C121, C123, C125, C126, C127, C129, C131, C133, C134, C136, C137, C139, C141, C143, C145, C147, C149, C151, C152 | CAP .22 uF 50V MONO | 1010274-1 | 10 |
| 8 | C44 THRU C45, C146, C158, C159 | CAP 6.8 uF 35V 10% S.TANT | 1005306 | 9 |
| 42 | C1 THRU C38, C40, C150, C155, C156 | CAP .01 uF 100V 20% DISC | 1001610 | 8 |
| 1 | C154 | CAP 100 PF 100V 5% D.M. | 1000016 | 7 |
| 1 | C157 | CAP 47 PF 100V 5% D.M. | 1000011 | 6 |
| 10 | C39, C40, C101, C107, C110, C113, C116, C119, C122, C125 | CAP 33 PF 100V 5% D.M. | 1000009 | 5 |
| 1 | | ETCHED CIRCUIT BOARD | 5009799 | 4 |
| REF | | MODULE ECO HISTORY | S-MH-M8109-0-6 | 3 |
| REF | | ASSY/DRILL HOLE LAYOUT | D-AH-M8109-0-5 | 2 |
| REF | | X-Y COORDINATE HOLE LOCATION | X-CO-M8109-0-4 | 1 |

PARTS LIST

| IC TYPE | GND | +5V | ITEM NO. | AWG | FROM PT | TO PT |
|---|---|---|---|---|---|---|
| DEC 74S112 | 8 | 16 | | | | |

GND AND 5V ARE USUALLY PIN 7 AND 14 RESPECTIVELY EXCEPTIONS ARE STATED ABOVE

IC PIN LOCATIONS — JUMPER LIST

| DEC NO. | EIA NO. |
|---|---|
| DEC 4258 | NONE |
| DEC 3009 B | 2N3646 |
| DEC FD777 | 1103041 |
| DEC G62 | 1N645 |

SEMICONDUCTOR CONVERSION CHART

| REVISIONS | CHG. | CHANGE NO. |
|---|---|---|
| D. VONADA 8-8-73 M8109-00001 M2 | M | |
| D. VONADA 11-21-73 M8109-00003 M2 | L | |
| D. VONADA 1-17-74 M8109-00005 M2 | K | |
| D. VONADA 3-28-74 M8109-00006 M | J | |
| D. VONADA 5-6-74 M8109-00007 M | H | |
| D. VONADA 5-6-74 M8109-00008 M | G | |
| D. VONADA 5-6-74 M8109-00009 M | F | |
| D. VONADA 7-16-74 M8109-00002 M | D | |
| D. VONADA 8-6-74 M8109-00004 M | E | |
| D. VONADA 8-6-74 M8109-00010 M | C | |
| D. VONADA 8-6-74 M8109-00011 M | B | |

ETCH BOARD REV C

DRN D. VONADA DATE 8/8/73
CHK [illegible] DATE 8/8/73
ENG [illegible] DATE 8/8/73
PROG [illegible] DATE 8/8/73

NEXT HIGHER ASSY B-DD-KB11-0

SCALE 2/1 SHEET 1 OF 6

DIGITAL EQUIPMENT CORPORATION

TITLE: TIMING GENERATOR

SIZE M3 NUMBER M8109-0-1 REV

DIST

This drawing and specifications, herein, are the property of Digital Equipment Corporation and shall not be reproduced or copied or used in whole or in part as the basis for the manufacture or sale of items without written permission.



TIGC TPB L
TIGA T1(1)L
PHKA STOP T1 L
TMCF SEL MOS L
TMCC ABORT H
UBCA BLP DESKEW H
TIGC TPB L
TIGA ROM INIT B L
TIGB CONT L
TIGA T1 (1) B L
SMCA MEM SYNC (B) L
TIGA MEM SYNC H
TIGA T1 MAT H
TIGA T2 MAT H
TIGA T3 MAT H
TIGA T4 MAT H
TIGA T5 MAT H
TIG TPH MAT H
TIGA STOP T1 L
TIGA T1 (1) L
TIGA ROM INIT A L
TIGC TPB H
TIGC TPB L
TIGA T4 (1) H
TIGA T1 SYNC (1) H
TIGA CONT H
TIGA ROM40 H
TIGB ROM+ UPB (1) H
TIGC TPB H
TIGA T5 (1) L
TIGA T5 (Ø) H
TIGA T2 (Ø) H
TIGA T1A (Ø) H
TIGA UBSDØØ H
TIGA SNG CY (1) H
TIGA T1 (1) H
+3VJ
TIGA STOP T1 L
UBCE ROM INIT H
TIGA ROM INITA L
TIGA ROM INITB L
TIGA T1 (1) H
TIGA T1 (1) B L
+3VM
+3VN
UBCA SSYN RESTART H
UBCA INTR RESTART H
PHKA STOP T3 L
TIGA SNGCY (1) H
TIGA T2A (1) H
TIGA CONT (1) L
RACH DIS BUST L
SSRB ENABLE T3 DLY H
TIGA STOP T3 L
TIGA T1 (1) H
TIGC TPB H
TIGA CONT H
TIGA SØ (1) H
TIGA S1 (1) H
TIGA SØ (1) H
+3VH
TIGA S1 (1) H
TIGB SINGLE CY L
TIGC TPB H
TIGA CONT H
+3VB
RACB UBSDØ1 H
TIGA UBSDØ1 L
TIGA UBSDØ1 H
RACB UBSDØØ H
TIGA UBSDØØ H
RACB ROM40 BL
TIGA ROM 40 H
TIGA UBSDØ1 H
TIGA ROM INIT B L
TIGA T1 SYNC (1) H
TIGA ROM INIT A L
TIGC TPB L
+3VK
TIGA T5(1) L
TIGA T1 (1) L

## — CAUTION —
## NON-STANDARD DRAWING
## FOR SPECIAL APPLICATION

TIMING GENERATOR CONTROL — SLOT 15

| FIRST USED ON OPTION/MODEL | QTY. | DESCRIPTION | PART NO. | ITEM NO. |
|---|---|---|---|---|
| 11/45 | | PARTS LIST | | |

UNLESS OTHERWISE SPECIFIED DIMENSION IN INCHES. TOLERANCES
DECIMALS .XXX = .005 .XX = .02 .X = .1 ANGLES ±0° 30'
REMOVE BURRS AND BREAK SHARP CORNERS SURFACE QUALITY ✓
MATERIAL
FINISH

| | | DATE |
|---|---|---|
| DRN | | 3/25/71 |
| CHK'D | | 4/2/71 |
| ENG | | 4/27/72 |
| PROJ ENG. | | 4/20/72 |
| PROD. | | 4-21-72 |

NEXT HIGHER ASSY. B-DD-KB11-Ø

digital EQUIPMENT CORPORATION MAYNARD, MASSACHUSETTS

TITLE: TIMING GENERATOR (TIGA)

SIZE D | CODE CS | NUMBER M8109-Ø-1 | REV. M2

SCALE — SHEET 2 OF 6 DIST.

REVISIONS | REV. | CHANGE NO. | CHK

DEC FORM NO DRD 102-B

This drawing and specifications, herein, are the property of Digital Equipment Corporation and shall not be reproduced or copied or used in whole or in part as a basis for the manufacture or sale of items without written permission.



SOURCE SYNCHRONIZER

CRYSTAL CLOCK

PHASE SPLITTER/BUFFER

R/C CLOCK (MAINTENANCE)

ROM V UPB CYCLE

| MAINT. SWITCHES: REF. TO XMAA BOARD | | |
|---|---|---|
| S4 | SINGLE TIME STEPPER | |
| S3 | Ø = CRYSTAL TIMING SOURCE<br>1 = RC TIMING SOURCE | |
| S1 | S2 | MODE CONTROL |
| Ø | Ø | NO EFFECT |
| Ø | 1 | SINGLE ROM CYCLE |
| 1 | Ø | UPB STOP |
| 1 | 1 | SINGLE PULSE (USE SWØ) |

NOTE:
1. ALL NPN TRANSISTORS ARE DEC 3009B AND ALL PNP TRANSISTORS ARE DEC 4258 UNLESS OTHERWISE NOTED. ALL DIODES ARE TYPE FD777 ALL CAPS ARE .22 µf 50V MONLYTHIC UNLESS OTHERWISE INDICATED.

TIMING SOURCE CONTROL — SLOT 15

FIRST USED ON OPTION/MODEL: 11/45

PARTS LIST — QTY. | DESCRIPTION | PART NO.

UNLESS OTHERWISE SPECIFIED DIMENSION IN INCHES. TOLERANCES
DECIMALS: XXX ± .005, .XX ± .02, .X ± .1 — ANGLES: ± 0° 30'
REMOVE BURRS AND BREAK SHARP CORNERS SURFACE QUALITY ✓
MATERIAL
FINISH

DRN. S.W. Roberts 8/26/71
CHK'D
ENG.
PROJ. ENG.
PROD.

digital EQUIPMENT CORPORATION MAYNARD MASSACHUSETTS

TITLE: TIMING GENERATOR (TIGB)

NEXT HIGHER ASSY.: B-DD-KB11-Ø
SCALE
SHEET 3 OF 6

SIZE D | CODE CS | NUMBER M8Ø9-Ø-1 | REV M2
DIST

| REVISIONS | CHANGE NO | CHK |
|---|---|---|

DEC FORM NO DRD 102-B

This drawing and specifications, herein, are the property of Digital Equipment Corporation and shall not be reproduced or copied or used in whole or in part as the basis for the manufacture or sale of items without written permission.

NOTES:
1. ALL NPN TRANSISTORS ARE DEC 3009B, ALL PNP TRANSISTORS ARE DEC 4258, ALL DIODES ARE TYPE FD 777, ALL CAPACITORS ARE .22μf 50V MONLYTHIC UNLESS OTHERWISE INDICATED.

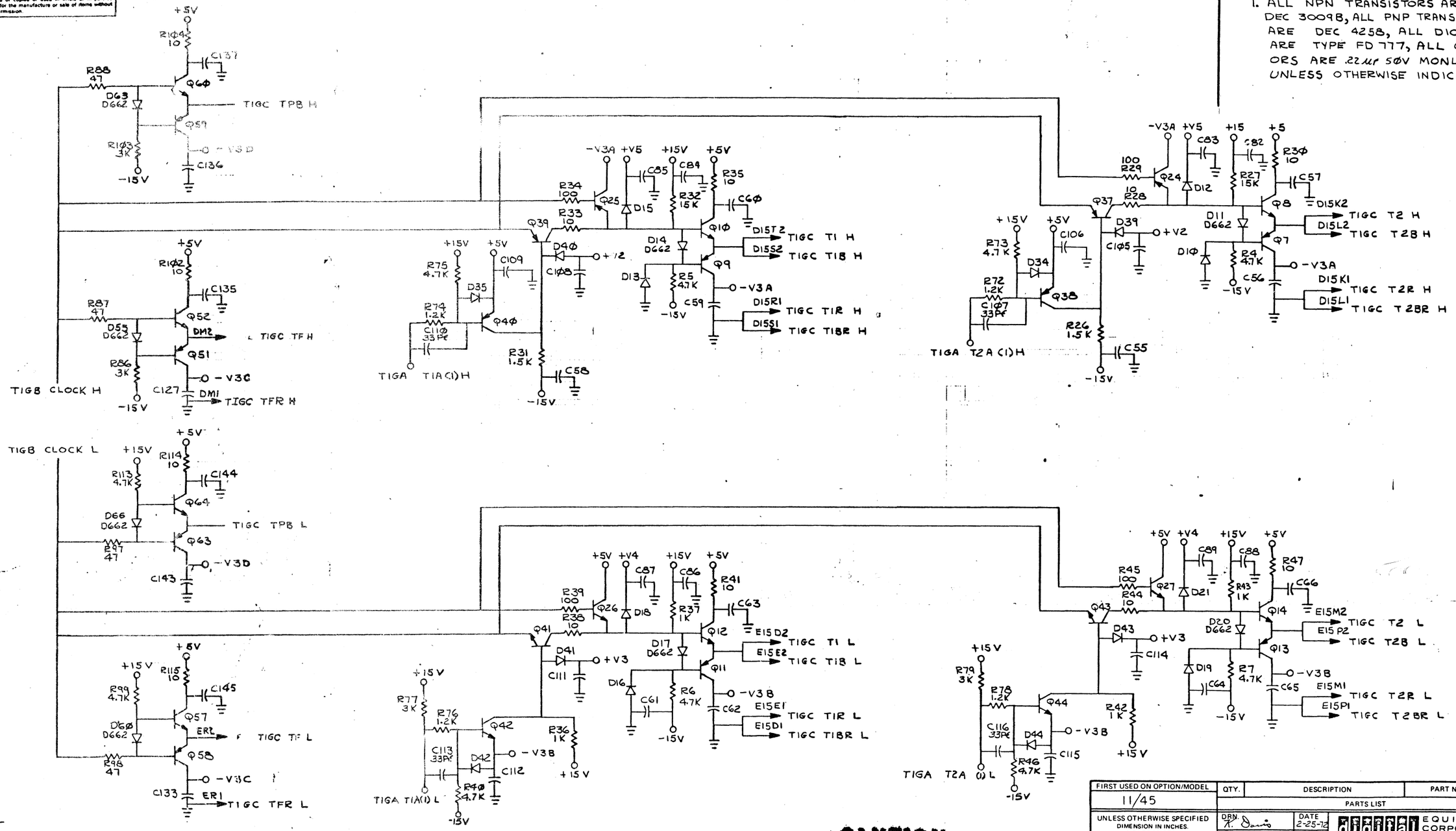


— CAUTION —
NON-STANDARD DRAWING
FOR SPECIAL APPLICATION

SLOT 15

| FIRST USED ON OPTION/MODEL | QTY. | DESCRIPTION | PART NO. | ITEM NO. |
|---|---|---|---|---|
| 11/45 | | PARTS LIST | | |

UNLESS OTHERWISE SPECIFIED DIMENSION IN INCHES. TOLERANCES
DECIMALS: .XXX = .005, .XX = .02, .X = .1 — ANGLES: ±0° 30'
REMOVE BURRS AND BREAK SHARP CORNERS SURFACE QUALITY ✓
MATERIAL —/—
FINISH —/—

DRN. K. Davis — DATE 2-25-72
CHK'D. [illegible] — DATE [illegible]
ENG. [illegible] — DATE 4/20/72
PROJ. ENG. [illegible] — DATE 4-20-72
PROD. [illegible] — DATE 4-21-72

digital EQUIPMENT CORPORATION MAYNARD MASSACHUSETTS

TITLE: TIMING GENERATOR (TIGC)

NEXT HIGHER ASSY. B-DD-KB11-Ø
SCALE —/—
SHEET 4 OF 6

SIZE D | CODE CS | NUMBER M81Ø9-Ø-1 | REV. M2
DIST

| REVISIONS | CHANGE NO | CHK | REV |
|---|---|---|---|

DEC FORM NO DRD 102-B

This drawing and specifications, herein, are the property of Digital Equipment Corporation and shall not be reproduced or copied or used in whole or in part as the basis for the manufacture or sale of items without written permission.



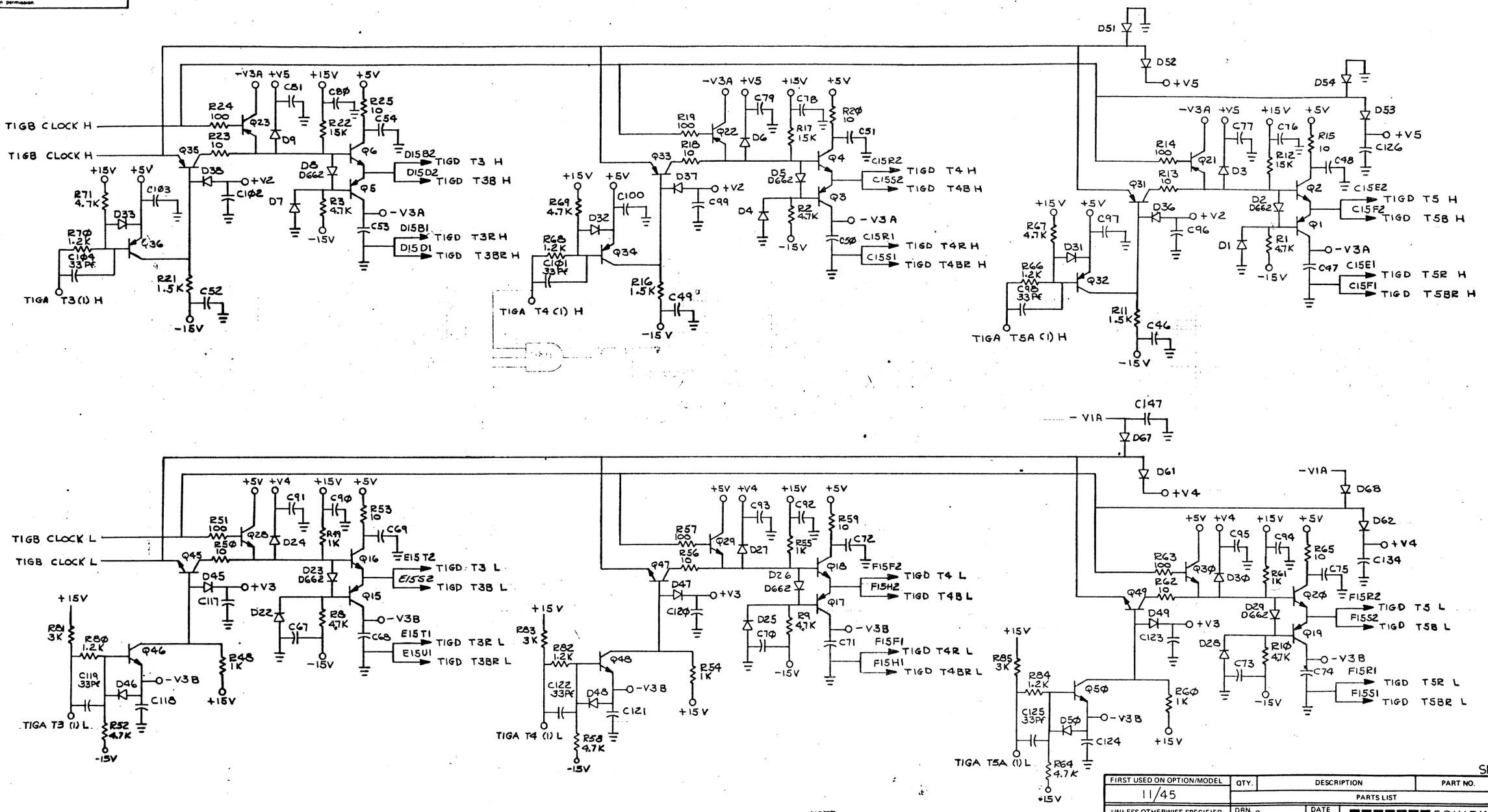


**— CAUTION —**
**NON-STANDARD DRAWING**
**FOR SPECIAL APPLICATION**

NOTE:
1. ALL NPN TRANSISTORS ARE DEC 3009B, ALL PNP TRANSISTORS ARE DEC 4258, ALL DIODES ARE TYPE FD777 ALL CAPACITORS ARE .22 μF MONOLYTHIC UNLESS OTHERWISE INDICATED.

| FIRST USED ON OPTION/MODEL | QTY. | DESCRIPTION | PART NO. |
|---|---|---|---|
| 11/45 | | PARTS LIST | |

UNLESS OTHERWISE SPECIFIED DIMENSION IN INCHES. TOLERANCES
DECIMALS: .XXX ± .005, .XX ± .02, .X ± .1; ANGLES: ±0° 30'
REMOVE BURRS AND BREAK SHARP CORNERS SURFACE QUALITY ✓
MATERIAL
FINISH

| | | |
|---|---|---|
| DRN. K. Davis | DATE 3-1-72 | digital EQUIPMENT CORPORATION MAYNARD MASSACHUSETTS |
| CHK'D. P.V. Dale | DATE 4/20/72 | |
| ENG. EV Hall | DATE 4/20/72 | TITLE: TIMING GENERATOR (TIGD) |
| PROJ. ENG. DB Smith | DATE 4-20-72 | |
| PROD. Jack Hamm | DATE 4-21-72 | |

NEXT HIGHER ASSY. B-DD-KB11-Ø
SCALE —
SHEET 5 OF 6
SIZE D | CODE CS | NUMBER M8109-0-1 | REV M
DIST

REVISIONS | REV | CHANGE NO | CHK

BRUNING 40-5321, 15840
DEC FORM NO DRD 102-B

This drawing and specifications, herein, are the property of Digital Equipment Corporation and shall not be reproduced or copied or used in whole or in part as the basis for the manufacture or sale of items without written permission.



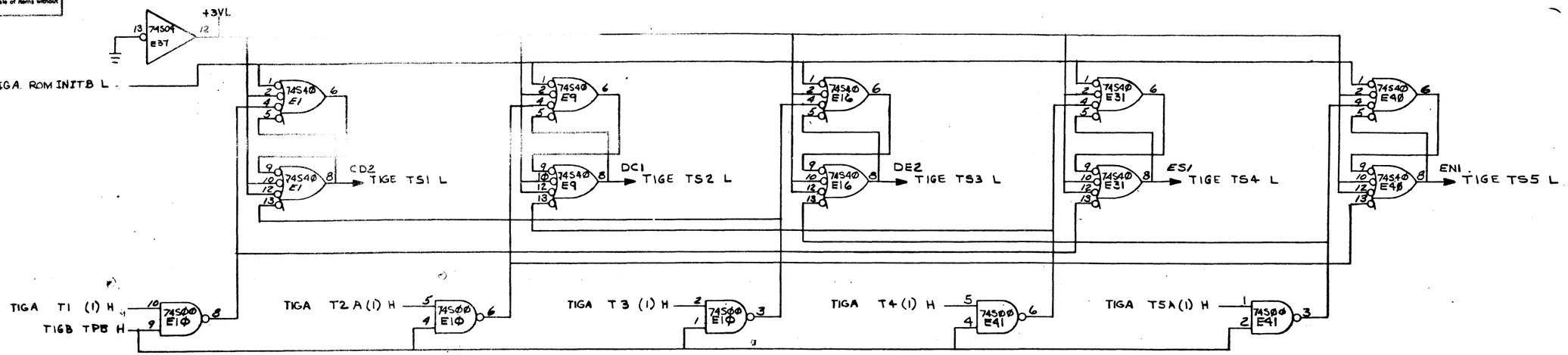


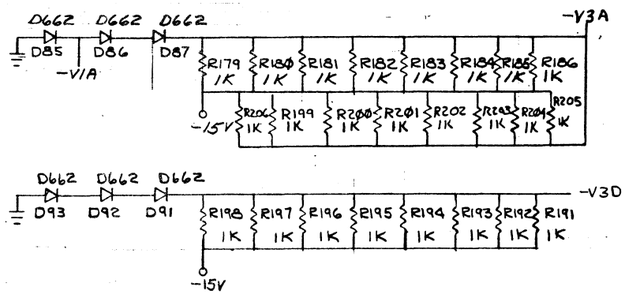


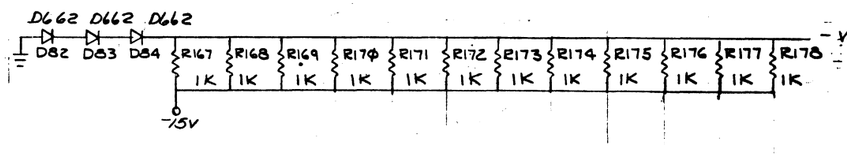





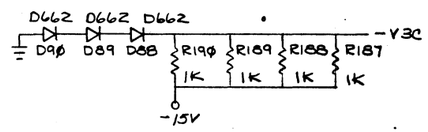


— CAUTION —
NON-STANDARD DRAWING
FOR SPECIAL APPLICATION

TIMING STATE DRIVERS SLOT 15

| FIRST USED ON OPTION/MODEL | QTY. | DESCRIPTION | PART NO. |
|---|---|---|---|
| 11/45 | | PARTS LIST | |

UNLESS OTHERWISE SPECIFIED DIMENSION IN INCHES. TOLERANCES
DECIMALS: .XXX = .005, .XX = .02, .X = .1 — ANGLES: ±0° 30'
REMOVE BURRS AND BREAK SHARP CORNERS SURFACE QUALITY ✓
MATERIAL —
FINISH —

| | | |
|---|---|---|
| DRN. L. Carberry | DATE 8-25-71 | digital EQUIPMENT CORPORATION MAYNARD MASSACHUSETTS |
| CHKD. M. E. Dolan | DATE 11/01/72 | |
| ENG. R. W. Hoff | DATE 11/20/72 | TITLE: TIMING GENERATOR (TIGE) |
| PROJ. ENG. D. D. Lovelace | DATE 4-20-72 | |
| PROD. Jack Norman | DATE 4-21-72 | |
| NEXT HIGHER ASSY. B-DD-KB11-0 | | SIZE D CODE CS NUMBER M8109-0-1 REV M2 |
| SCALE — | | DIST. |
| SHEET 6 OF 6 | | |

REVISIONS | REV | CHANGE NO. | CHK

DEC FORM NO DRD 102-B

8 7 6 5 4 3 2 1

M2 CS M8109-0-1

[redacted] EQUIPMENT CORPORATION
MAYNARD, MASSACHUSETTS

# DRAWING DIRECTORY

## CUSTOMER PRINT SET INDEX

THIS IS PRINT SET [ ][ ][ ][ ][ ][ ]

| SEQUENCE | | SEQUENCE (SHEET ONE ONLY) |
|---|---|---|
| DRAWING DIRECTORY | B-DD-KB11-Ø | |
| MODULE UTILIZATION | E-MU-KB11-A-1 | |
| BLOCK DIAGRAM | D-BD-KB11-A-Ø2 | |
| KB11-A FLOW DIAGRAMS | D-FD-KB11-A-Ø3 | |
| DATA PATHS (DAP) | E-CS-M81ØØ-Ø-1 | |
| GENERAL REGS & ALU CNTL(GRA) | E-CS-M81Ø1-Ø-1 | |
| IR DECODE & COND CODES(IRC) | E-CS-M81Ø2-Ø-1 | |
| PROC DATA & UNIBUS REG(PDR) | E-CS-M81Ø4-Ø-1 | |
| ROM & ROM CONTROL(RAC) | E-CS-M81Ø3-Ø-1 | |
| SYSTEM JUMPER BOARD(SJB) | E-CS-M8116-Ø-1 | |
| TIMING GENERATOR(TIG) | E-CS-M81Ø9-Ø-1 | |
| TRAP & MISC CNTL(TMC) | E-CS-M81Ø5-Ø-1 | |
| UNIBUS & CONSOLE CNTL (UBC) | E-CS-M81Ø6-Ø-1 | |
| BUS CABLES & GRANT CHAIN | D-IC-KB11-A-BG | |
| CIRCUIT SCHEMATIC | C-CS-M93Ø-Ø-1 | |
| CIRCUIT SCHEMATIC | C-CS-M92Ø-Ø-1 | |
| CIRCUIT SCHEMATIC | E-CS-5409910-0-1 | |
| CIRCUIT SCHEMATIC | E-CS-5409912-0-1 | |
| **CIRCUIT SCHEMATIC(TIG)** | **E-CS-M81Ø9-0-1** | |
| **SPECIAL REVISION** | | |

### UNIT VARIATIONS

| VARIATION | TITLE | PRINT SET TYPE: KB11-1 |
|---|---|---|
| KB11-A | 16 BIT PROCESSOR | X |

| REVISIONS | | |
|---|---|---|
| DATE | CHG. NO. | REV |
| 5/72 | 7008871-00002 | A |
| 9/72 | 7008871-00003 | B |
| KB11A-6 | | C |
| KB11A-7 | | D |
| KB11A-8 | | E |
| KB11A-9 | | F |
| KB11A-11 | | H |
| KB11A-12A | | J |
| KB11A-13 | | K |
| 1/73 | KB11A-14 | L |
| 3/73 | KB11A-15 | M |
| 5/73 | KB11A-16 | N |
| 5/73 | KB11A-17 | P |
| 8/73 | KB11A-18 | R |
| 12/73 | KB11A-19 | S |
| 3-74 | KB11A-20 | T |
| 6-74 | KB11A-21 | U |

USED ON OPTION/MODEL: 11/45

| | | | |
|---|---|---|---|
| DRN. R. COOK | DATE 3/30/72 | TITLE: 16 BIT PROCESSOR | |
| CHK'D. R.COOK | DATE 3/30/72 | | |
| PROJ ENG. | DATE 4/28/72 | | |
| PROD. | DATE 5-1-72 | SIZE B | CODE DD |
| FIELD SERV. | DATE 5/1/72 | NUMBER KB11-Ø | REV U |
| SHEET 1 OF 5 | | DIST | |

DRB 106

DEC 16—(326)—1062—1—M871

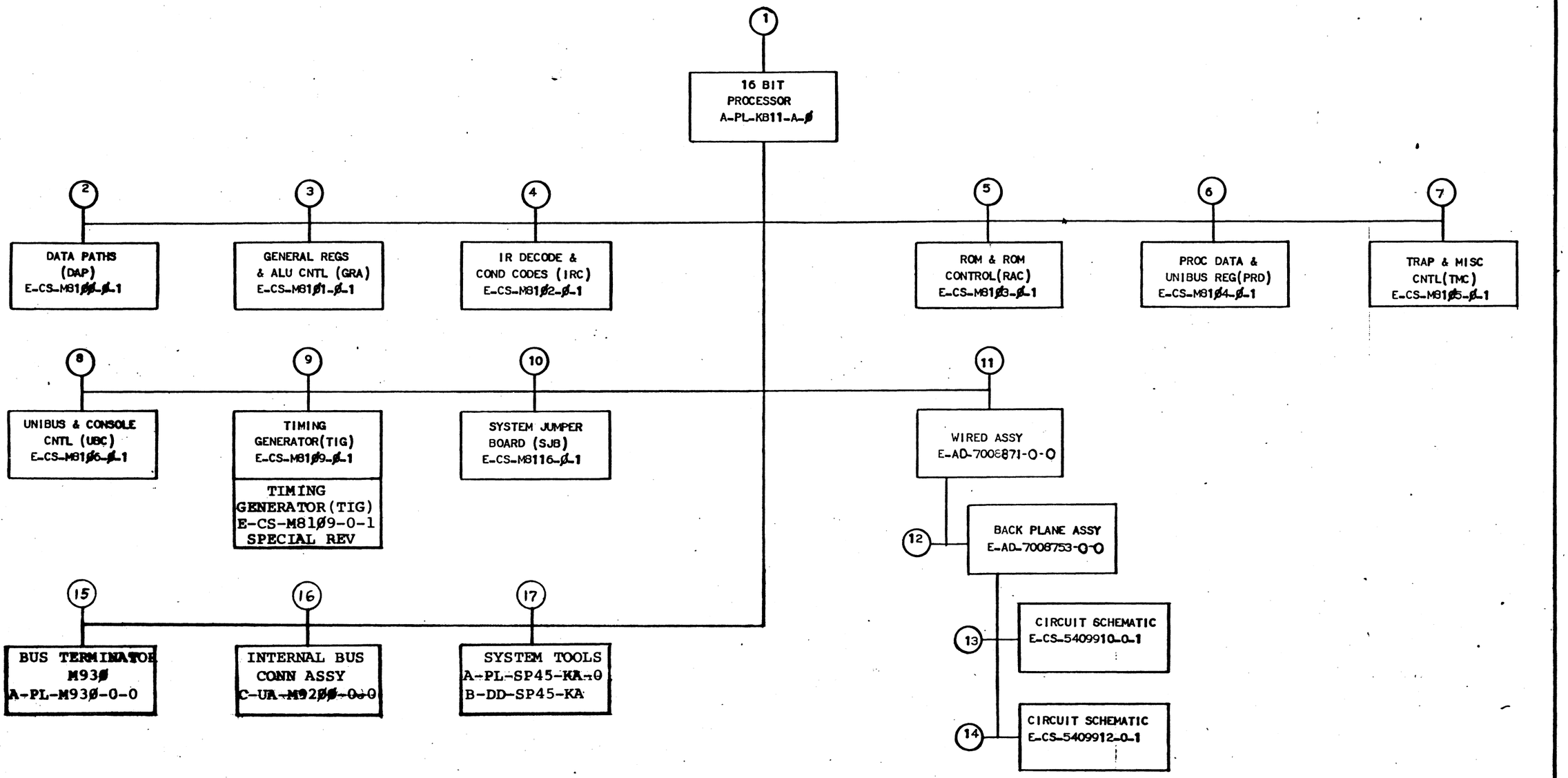


| TITLE | | SIZE | CODE | NUMBER | REV |
|---|---|---|---|---|---|
| 16 BIT PROCESSOR | SHEET 2 OF 5 | B | DD | KB11-0 | U |

| CUSTOMER PRINT SET | MFG. SET | ELECTRICAL FIND NO. | DRAWING NO. | REV | NO OF SHT | DESCRIPTION | OPTION NO. |
|---|---|---|---|---|---|---|---|
| | | 1 | A-PL-KB11-A-Ø | | 1 | 16 BIT PROCESSOR | |
| X | | | E-MU-KB11-A-1 | A | 1 | MODULE UTILIZATION | |
| X | | | D-BD-KB11-A-Ø2 | | 2 | BLOCK DIAGRAM | |
| X | | | D-FD-KB11-A-Ø3 | A | 15 | KB11-A FLOW DIAGRAMS | |
| X | | | D-IC-KB11-A-BG | | 1 | BUS CABLES AND GRANT CHAIN | |
| X | | 2 | E-CS-M81ØØ-Ø-1 | # | 9 | DATA PATHS (DAP) | |
| | | | K-CO-M81ØØ-Ø-4 | | 1 | X-Y CO-ORDINATE HOLE LOC | |
| | | | E-AH-M81ØØ-Ø-5 | | 1 | ASSY/SRILLING HOLE LAYOUT | |
| | | | B-MH-M81ØØ-Ø-6 | | 1 | MODULE ECO HISTORY | |
| X | | 3 | E-CS-M81Ø1-Ø-1 | # | 10 | GENERAL REGS E ALU CNTL(GRA) | |
| | | | K-CO-M81Ø1-Ø-4 | | 1 | X-Y CO-ORDINATE HOLE LOC | |
| | | | E-AH-M81Ø1-Ø-5 | | 1 | ASSY/DRILLING HOLE LAYOUT | |
| | | | B-MH-M81Ø1-Ø-6 | | 1 | MODULE ECO HISTORY | |
| X | | 4 | E-CS-M81Ø2-Ø-1 | # | 8 | IR DECODE & COND CODES(IRC) | |
| | | | K-CO-M81Ø2-Ø-4 | | 1 | X-Y CO-ORDINATE HOLE LOC | |
| | | | E-AH-M81Ø2-Ø-5 | | 1 | ASSY/DRILLING HOLE LAYOUT | |
| | | | B-MH-M81Ø2-Ø-6 | | 1 | MODULE ECO HISTORY | |
| X | | 5 | E-CS-M81Ø3-Ø-1 | # | 15 | ROM & ROM CONTROL (RAC) | |
| | | | K-CO-M81Ø3-Ø-4 | | 1 | X-Y CO-ORDINATE HOLE LOC | |
| | | | E-AH-M81Ø3-Ø-5 | | 1 | ASSY/DRILLING HOLE LAYOUT | |
| | | | B-MH-M81Ø3-Ø-6 | | 1 | MODULE ECO HISTORY | |
| X | | 6 | E-CS-M81Ø4-Ø-1 | # | 8 | PROC DATA & UNIBUS REG(PRD) | |
| | | | K-CO-M81Ø4-Ø-4 | | 1 | X-Y CO-ORDINATE HOLE LOC | |
| | | | E-AH-M81Ø4-Ø-5 | | 1 | ASSY/DRILLING HOLE LAYOUT | |
| | | | B-MH-M81Ø4-Ø-6 | | 1 | MODULE ECO HISTORY | |
| X | | 7 | E-CS-M81Ø5-Ø-1 | # | 7 | TRAP & MISC CNTL(TMC) | |
| | | | K-CO-M81Ø5-Ø-4 | | 1 | X-Y CO-ORDINATE HOLE LOC | |
| | | | E-AH-M81Ø5-Ø-5 | | 1 | ASSY/DRILLING HOLE LAYOUT | |
| | | | B-MH-M81Ø5-Ø-6 | | 1 | MODULE ECO HISTORY | |

| CUSTOMER PRINT SET | MFG. SET | ELECTRICAL FIND NO. | DRAWING NO. | REV | NO OF SHT | DESCRIPTION | OPTION NO. |
|---|---|---|---|---|---|---|---|
| X | | 8 | C-CS-M81Ø6-Ø-1 | # | 9 | UNIBUS & CONSOLE CNTL(URC) | |
| | | 1 | K-CO-M81Ø6-Ø-4 | | 1 | X-Y CO-ORDINATE HOLE LOC | |
| | | 1 | E-AH-M81Ø6-Ø-5 | | 1 | ASSY/DRILLING HOLE LAYOUT | |
| | | | B-MH-M81Ø6-Ø-6 | | 1 | MODULE ECO HISTORY | |
| X | | 9 | E-CS-M81Ø9-Ø-1 | # | 6 | TIMING GENERATOR (TIG) | |
| | | | K-CO-M81Ø9-Ø-4 | | 1 | X-Y CO-ORDINATE HOLE LOC | |
| | | | E-AH-M81Ø9-Ø-5 | | 1 | ASSY/DRILLING HOLE LAYOUT | |
| | | | B-MH-M81Ø9-Ø-6 | | 1 | MODULE ECO HISTORY | |
| | X | | E-CS-M8109-0-1 | M# | 6 | TIMING GENERATOR(TIG) "C" ETCH ONLY | |
| X | | 10 | E-CS-M8116-Ø-1 | # | 3 | SYSTEM JUMPER BOARD (SJB) | |
| | | | K-CO-M8116-Ø-4 | | 1 | X-Y CO-ORDINATE HOLE LOC | |
| | | | E-AH-M8116-Ø-5 | | 1 | ASSY/DRILLING HOLE LAYOUT | |
| | | | B-MH-M8116-Ø-6 | | 1 | MODULE ECO HISTORY | |
| | | 11 | E-AD-7008871-0-0 | D | 1 | WIRED ASSY | |
| | | | K-WL-KB11-A-4 | N | 1 | WIRE LIST | |
| | | 12 | E-AD-7008753-0-0 | | 1 | BACK PLANE ASSY | |
| X | | 13 | E-CS-5409910-0-1 | # | 1 | CIRCUIT SCHEMATIC | |
| | | | K-CO-5409910-0-4 | | 1 | X-Y CO-ORDINATE HOLE LOC | |
| | | | B-MH-5409910-0-6 | | 1 | MODULE ECO HISTORY | |
| X | | 14 | E-CS-5409912-0-1 | # | 1 | CIRCUIT SCHEMATIC | |
| | | | K-CO-5409912-0-4 | | 1 | X-Y CO-ORDINATE HOLE LOC | |
| | | | B-MH-5409912-0-6 | | 1 | MODULE ECO HISTORY | |

| TITLE | | SIZE | CODE | NUMBER | REV |
|---|---|---|---|---|---|
| 16 BIT PROCESSOR | SHEET 3 OF 5 | B | DD | KB11-Ø | U |

## ELECTRICAL

| CUSTOMER PRINT SET K-B11-1 | MFG. SET | FIND NO. | DRAWING NO. | REV | NO OF SHT | DESCRIPTION | OPTION NO. |
|---|---|---|---|---|---|---|---|
| | | 15. | A-PL-M93Ø-Ø-Ø | | 1 | BUS TERMINATOR M93Ø | |
| X | | | C-CS-M93Ø-Ø-1 | # | 1 | CIRCUIT SCHEMATIC | |
| | | | K-CO-M93Ø-Ø-4 | | 1 | X-Y CO-ORDINATE HOLE LOC | |
| | | | D-AH-M93Ø-Ø-5 | | 1 | ASSY/DRILLING HOLE LAYOUT | |
| | | | B-MH-M93Ø-Ø-6 | | 1 | MODULE ECO HISTORY | |
| | | 16. | C-UA-M92ØØ-Ø-Ø | | 1 | INTERNAL BUS CONN ASSY | |
| X | | | C-CS-M92Ø-Ø-1 | # | 1 | CIRCUIT SCHEMATIC | |
| | | | K-CO-M92Ø-Ø-4 | | 1 | X-Y CO-ORDINATE HOLE LOC | |
| | | | D-AH-M92Ø-Ø-5 | | 1 | ASSY/DRILLING HOLE LAYOUT | |
| | | | B-MH-M92Ø-Ø-6 | | 1 | MODULE ECO HISTORY | |

## MECHANICAL

| CUSTOMER PRINT SET KB11-1 | MFG SET | FIND NO. | DRAWING NO. | REV | NO OF SHT | DESCRIPTION | OPTION NO. |
|---|---|---|---|---|---|---|---|
| | | 1. | A-PL-KB11-A-Ø | | 1 | 16 BIT PROCESSOR | |
| | | 2. | E-CS-M81ØØ-Ø-1 | # | 9 | DATA PATHS (DAP) | |
| | | | K-CO-M81ØØ-Ø-4 | | 1 | X-Y CO-ORDINATE HOLE LOC | |
| | | | E-AH-M81ØØ-Ø-5 | | 1 | ASSY/DRILLING HOLE LAYOUT | |
| | | | B-MH-M81ØØ-Ø-6 | | 1 | MODULE ECO HISTORY | |
| | | | E-PS-1210711-0-0 | | 2 | HANDLE, MODULE | |
| | | 3. | E-CS-M81Ø1-Ø-1 | # | 10 | GENERAL REGS & ALU CNTL(GRA) | |
| | | | K-CO-M81Ø1-Ø-4 | | 1 | X-Y CO-ORDINATE HOLE LOC | |
| | | | E-AH-M81Ø1-Ø-5 | | 1 | ASSY/DRILLING HOLE LAYOUT | |
| | | | B-MH-M81Ø1-Ø-6 | | 1 | MODULE ECO HISTORY | |
| | | | E-PS-1210711-0-0 | | 2 | HANDLE, MODULE | |
| | | 4. | E-CS-M81Ø2-Ø-1 | # | 8 | IR DECODE & COND CODES(IRC) | |
| | | | K-CO-M81Ø2-Ø-4 | | 1 | X-Y CO-ORDINATE HOLE LAYOUT | |
| | | | E-AH-M81Ø3-Ø-5 | | 1 | ASSY/DRILLING HOLE LAYOUT | |
| | | | B-MH-M81Ø3-Ø-6 | | 1 | MODULE, ECO HISTORY | |
| | | | E-PS-1210711-0-0 | | 2 | HANDLE, MODULE | |
| | | 5. | E-CS-M81Ø3-Ø-1 | # | 15 | ROM & ROM CONTROL(RAC) | |
| | | | K-CO-M81Ø3-Ø-4 | | 1 | X-Y CO-ORDINATE HOLE LOC | |
| | | | E-AH-M81Ø3-Ø-5 | | 1 | ASSY/DRILLING HOLE LAYOUT | |
| | | | B-MH-M81Ø3-Ø-6 | | 1 | MODULE ECO HISTORY | |
| | | | E-PS-1210711-0-0 | | 2 | HANDLE, MODULE | |
| | | 6. | E-CS-M81Ø4-Ø-1 | # | 8 | PROC DATA & UNIBUS REG(PRD) | |
| | | | K-CO-M81Ø4-Ø-4 | | 1 | X-Y CO-ORDINATE HOLE LOC | |
| | | | E-AH-M81Ø4-Ø-5 | | 1 | ASSY/DRILLING HOLE LAYOUT | |
| | | | B-MH-M81Ø4-Ø-6 | | 1 | MODULE ECO HISTORY | |
| | | | E-PS-1210711-0-0 | | 2 | HANDLE, MODULE | |
| | | 7. | E-CS-M81Ø5-Ø -1 | # | 7 | TRAP & MISC CNTL(TMC) | |
| | | | K-CO-M81Ø5-Ø-4 | | 1 | X-Y CO-ORDINATE HOLE LOC | |
| | | | E-AH-M81Ø5-Ø-5 | | 1 | ASSY/DRILLING HOLE LAYOUT | |
| | | | B-MH-M81Ø5-Ø-6 | | 1 | MODULE ECO HISTORY | |
| | | | E-PS-1210711-0-0 | | 2 | HANDLE, MODULE | |

| TITLE | | SIZE | CODE | NUMBER | REV |
|---|---|---|---|---|---|
| 16 BIT PROCESSOR | SHEET 4 OF 5 | B | DD | KB11-0 | U |

| CUSTOMER PRINT SET KB11-1 | MFG. SET | FIND NO. | DRAWING NO. | REV | NO OF SHT | DESCRIPTION | OPTION NO. |
|---|---|---|---|---|---|---|---|
| | | | MECHANICAL | | | | |
| | | 8. | E-CS-M8106-0-1 | # | 9 | UNIBUS & CONSOLE CNTL(UBC) | |
| | | | K-CO-M8106-0-4 | | 1 | X-Y CO-ORDINATE HOLE LOC | |
| | | | E-AH-M8106-0-5 | | 1 | ASSY/DRILLING HOLE LAYOUT | |
| | | | B-MH-M8106-0-6 | | 1 | MODULE ECO HISTORY | |
| | | | E-PS-1210711-0-0 | | 2 | HANDLE, MODULE | |
| | | 9. | E-CS-M8109-0-1 | # | 6 | TIMING GENERATOR(TIG) | |
| | | | K-CO-M8109-0-4 | | 1 | X-Y CO-ORDINATE HOLE LOC | |
| | | | E-AH-M8109-0-5 | | 1 | ASSY/DRILLING HOLE LAYOUT | |
| | | | B-MH-M8109-0-5 | | 1 | MODULE ECO HISTORY | |
| | | | E-PS-1210711-0-0 | | 2 | HANDLE, MODULE | |
| | | | E-CS-M8109-0-1 | # | 6 | TIMING GENERATOR(TIG) "C" ETCH ONLY | |
| | | 10. | E-CS-M8116-0-1 | # | 3 | SYSTEM JUMPER BOARD(SJB) | |
| | | | K-CO-M8116-0-4 | | 1 | X-Y CO-ORDINATE HOLE LOC | |
| | | | E-AH-M8116-0-5 | | 1 | ASSY/DRILLING HOLE LAYOUT | |
| | | | B-MH-M8116-0-6 | | 1 | MODULE ECO HISTORY | |
| | | | E-PS-1210711-0-0 | | 2 | HANDLE, MODULE | |
| | | 11. | E-AD-7008871-0-0 | D | 1 | WIRED ASSY | |
| | | | D-IA-7409676-0-0 | | 1 | SUPPORT, CONN | |
| | | | C-PS-1210698-0-0 | | 1 | CENTER CARD GUIDE | |
| | | 12. | E-AS-7008753-0-0 | | 1 | BACK PLANE ASSY | |
| | | | D-MD-7410882-0-0 | | 1 | SUPPORT, LOGIC | |
| | | | E-PS-1210258-0-0 | | 1 | 288 PIN BLOCK TYPE H863 | |
| | | | C-MD-7409261-0-0 | | 1 | BAR, LOGIC SUPPORT | |
| | | | D-MD-5009936-0-0 | | 1 | SHEET, PROTECTION | |
| | | 13. | E-CS-5409910-0-1 | # | 1 | CIRCUIT SCHEMATIC | |
| | | | K-CO-5409910-0-4 | | 1 | X-Y CO-ORDINATE HOLE LOC | |
| | | | B-MH-5409910-0-6 | | 1 | MODULE ECO HISTORY | |
| | | | E-IA-5009909-0-0 | | 1 | ETCH BOARD | |
| | | 14. | E-CS-5409912-0-1 | # | 1 | CIRCUIT SCHEMATIC | |
| | | | K-CO-5409912-0-4 | | 1 | X-Y CO-ORDINATE HOLE LOC | |
| | | | B-MH-5409912-0-6 | | 1 | MODULE ECO HISTORY | |
| | | | E-IS-5009911-0-0 | | 1 | ETCH BOARD | |
| | | 15 | A-PL-M930-0-3 | | 1 | BUS TERMINATOR | |
| | | | K-CO-M930-0-4 | | 1 | X-Y CO-ORDINATE HOLE LOC | |
| | | | D-AH-M930-0-5 | | 1 | ASSY/DRILLING HOLE LAYOUT | |
| | | | B-MH-M930-0-6 | | 1 | MODULE ECO HISTORY | |
| | | 16 | C-UA-M9200-0-0 | | 1 | INTERNAL BUS CONN ASSY | |
| | | | K-CO-M9200-0-4 | | 1 | X-Y CO-ORDINATE HOLE LOC | |
| | | | D-AH-M9200-0-5 | | 1 | ASSY/DRILLING HOLE LAYOUT | |
| | | | B-MH-M9200-0-6 | | 1 | MODULE ECO HISTORY | |
| | | | A-DC-7407806-0-0 | | 1 | DEC UNIBUS DECAL | |
| | | | D-IA-5003647-0-0 | | 1 | INTERNAL BUS CONN ETCH BOARD | |
| | | | B-MD-7409670-0-0 | | 1 | HANDLE, BUS MODULE REWORK | |

| TITLE | | SIZE | CODE | NUMBER | REV |
|---|---|---|---|---|---|
| 16 BIT PROCESSOR | SHEET 5 OF 5 | B | DD | KB11-A | U |

ECO No. M8109-00016 Sheet 3 of 14

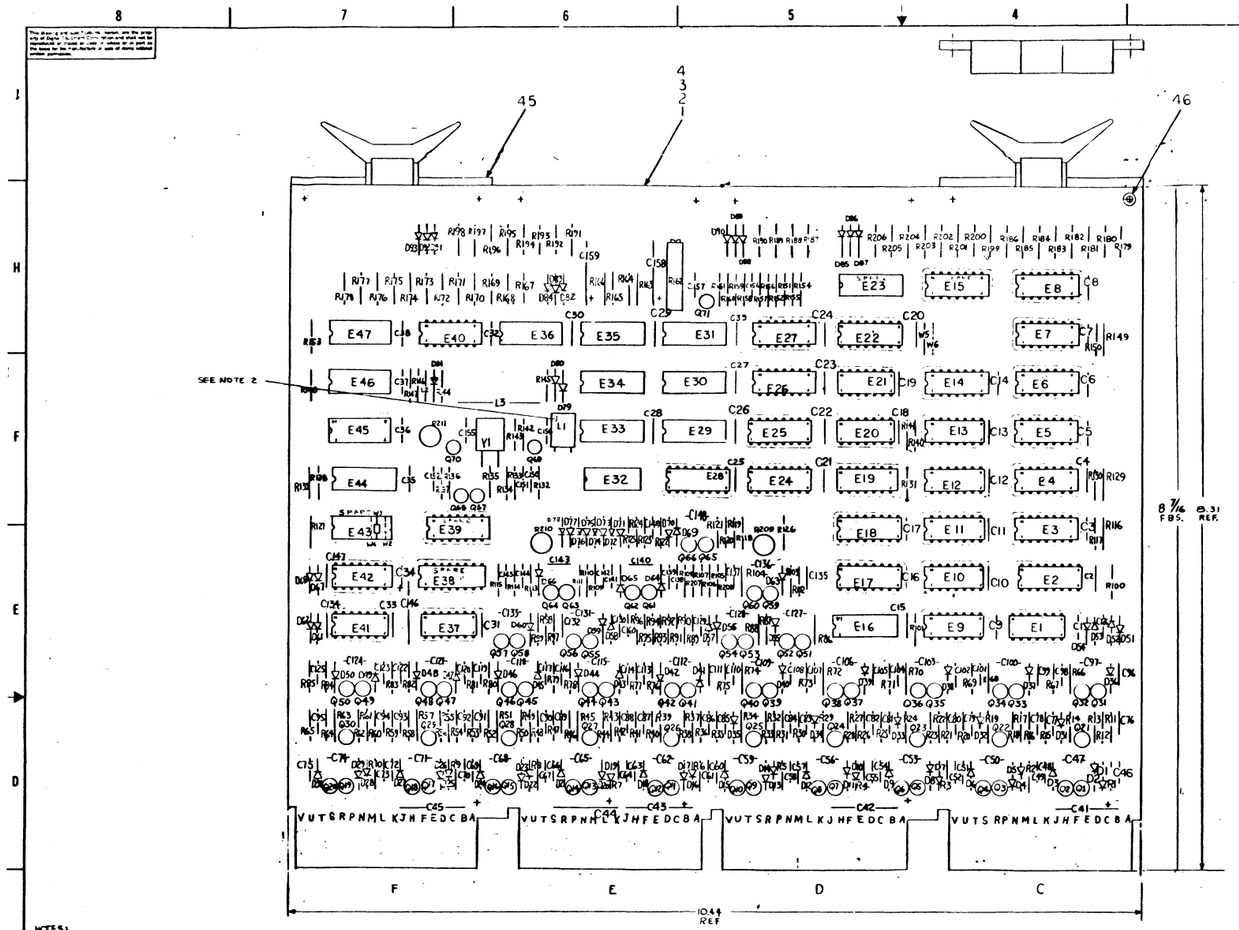


NOTES:
1. UNLESS OTHERWISE NOTED: RESISTANCE IS IN Ω, CAPACITANCE IS IN PICOFARADS. CAPS WITHOUT VALUE NOTED ARE .22 MFD 50V.
2. DIODES ARE TYPE FD777 OR EQUAL. ALL NPN TRANSISTORS ARE DEC 3009184 PNP TRANSISTORS ARE DEC 4258.

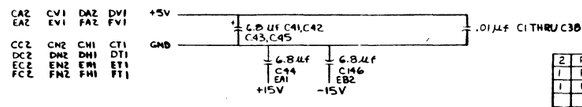


| | | | | |
|---|---|---|---|---|
| 2 | R209, R210 | POT. 2K 1/2 W | 13-09150-07 | 51 |
| 1 | R211 | POT. 100 1/2 W | 13-09150-05 | 50 |
| 1 | R136 | RES. 120 1/4 W 5% | 13-00247 | 49 |
| | | | | 48 |
| 2 | W3,W5 | JUMPER INSULATED | 9009185 | 47 |
| 8 | | EYELET #654-7 | 100673L | 46 |
| 4 | | HANDLE FLIP CHIP MAGENTA | 900B337-04 | 45 |
| 1 | Y1 | CRYSTAL 33.333 MHZ | 1B10694-1 | 44 |
| 1 | L2 | INDUCTOR 47 uh NYTRONICS WEE-WEE -047 | 1610999 | 43 |
| 1 | L1 | INDUCTOR .22 uh VARIABLE NYTRONICS WEE VL .22 | 1611000 | 42 |
| 1 | L3 | INDUCTOR RFCS 33 uh | 1601759 | 41 |
| QTY | REF DESIGNATION | DESCRIPTION | PART NO | ITEM NO |

PARTS LIST

| | | | | |
|---|---|---|---|---|
| 35 | Q1,5 Q7,9 Q11, Q14 Q15, Q17 Q19 Q21, Q23, Q25, Q31 THRU Q40, Q51, Q54, Q56 Q58 Q59, Q61 Q65 Q66 Q67, Q70 | TRANSISTOR DEC 4258 | 1505321 | 40 |
| 36 | Q2,4 Q6 Q8, Q10, Q12, Q13, Q16 Q18, Q20, Q22, Q24, Q26 THRU Q30, Q31 THRU Q50, Q52, Q53, Q57, Q60, Q62, Q64, Q68, Q71 Q69 | TRANSISTOR DEC 3009184 | 1503160 | 39 |
| A | E35 | IC DEC 74S40 | 1105946 | 38 |
| B | E1, E7, E18, E22, E24, E25, E28, E44 | IC DEC 74S112 | 1105945 | 37 |
| C | E5, E8, E9, E29, E33 E6, E26, E27 | IC DEC 74S74 | 1910544 | 36 |
| D | E11, E12, E13, E20 | IC DEC 74S65 | 1910543 | 35 |
| E | E32 | IC DEC 74S64 | 1910542 | 34 |
| F | E17, E19, E16, E37, E41 | IC DEC 74S40 | 1910541 | 33 |
| G | E10, E46 | IC DEC 74S20 | 1910539 | 32 |
| H | E3, E34, E47 | IC DEC 74S11 | 1910537 | 31 |
| J | E4, E7, E2, E30, E45 | IC DEC 74S04 | 1910534 | 30 |
| K | E40, E31, E36, E42 | IC DEC 74S00 | 1910532 | 29 |
| L | R162 | POT 1K 3/4W 10% | 1309143-07 | 28 |
| M | R11, R130, R131, R140, R47, R150, R151, R166, R166 | RES 680 1/4W 5% | 1301424 | 27 |
| N | R142 | RES. 750 1/4W 5% | 1301401 | 26 |
| P | R44, R48, R30, R32, R34, R76, R78, R80, R82, R84, R118, R119, R120 | RES. 1.2K 1/4W 5% | 1301320 | 25 |
| R | R115, R116, R120, R23, R25, R28, R30, R33, R35, R38, R41, R44 THRU R50, R53, R56, R59, R62, R65, R102, R104, R105, R132, R158 | RES. 10 1/4W 5% | 1301317 | 24 |
| S | R12, R13, R22, R27, R32 | RES. 15K 1/4 5% | 1300496 | 23 |
| T | R21 THRU R40, R46 R52 R58, R64, R67, R69, R71 R73, R75, R99, R113 | RES. 4.7K 1/4 5% | 1300447 | 22 |
| U | R77, R79, R81, R83, R85, R86, R103 | RES. 3K 1/4 5% | 1300432 | 21 |
| V | R14, R16, R22, R26, R31, R143 | RES. 15K 1/4 5% | 1300391 | 20 |
| W | R36, R37, R42, R43, R48, R49, R51, R54, R55, R60, R61, R69 THRU R96, R105 THRU R111, R112, R113, R124, R126, R127, R135, R139, R148, R153, R167 THRU R208 | RES. 1K 1/4 5% | 1300365 | 19 |
| X | R45, R129, R141, R146, R149, R150, R152, R153, R160, R161, R165 | RES. 330 1/4W 5% | 1302895 | 18 |
| Y | R145 | RES. 220 1/4W 5% | 1300271 | 17 |
| Z | R52, R54, R57, R61, R131, R154, R155 | RES. 150 1/4W 5% | 1300250 | 16 |
| AA | R18, R19, R24, R29, R34, R39, R45, R51, R57, R63, R121 | RES. 100 1/4W 5% | 1300229 | 15 |
| BB | R133, R137 | RES. 68 1/4W 5% | 1300219 | 14 |
| CC | R87, R88, R97, R134, R135, R144, R98 | RES. 47 1/4W 5% | 1300202 | 13 |
| DD | D1,2,3 D4, D6, D7, D9, D10, D11, D13, D15, D16, D18, D19, D21, D22, D23, D24, D25, D27, D28, D30, D31 THRU D54, D57, D58, D61, D62, D64, D67, D68, D69, D65, D70 | DIODE FD777 | 1103041 | 12 |
| EE | D2, D5, D8, D11, D14, D17, D20, D23, D26, D29, D55, D56, D59, D60, D63, D66, D71 THRU D93 | DIODE D662 | 1100113 | 11 |
| FF | C4 THRU C7, C9, C100, C101, C102, C103, C105, C106, C108, C109, C111, C112, C114, C115, C117, C118, C120, C121, C123, C124, C126, C127 THRU C145, C147, C148, C149, C151, C152 | CAP .22 uF 50V MONO. | 1010274-1 | 10 |
| GG | C41 THRU C45, C146, C158, C159 | CAP 6.8uF 35V 10% TANT | 1005306 | 9 |
| HH | C8 THRU C39, C150 C155, C156, | CAP .01uF 100V 20% DISC | 1001610 | 8 |
| J | C154 | CAP 1000 PF 100V 5% DM | 1000616 | 7 |
| K | C157 | CAP 47 PF 100V 5% DM | 1000611 | 6 |
| LL | C148, C151, C149, C150, C152, C113, C115, C116, C125 | CAP 33PF 100V 5% DM | 1000609 | 5 |
| | | PRINTED CIRCUIT BOARD | 5009709 | 4 |
| | | REVISION RECORD | | 3 |
| | | ASSEMBLY DRAWING | | 2 |
| | | SCHEMATIC DIAGRAM | | 1 |
| QTY | REF DESIGNATION | DESCRIPTION | PART NO | ITEM NO |

PARTS LIST

| | | | | | |
|---|---|---|---|---|---|
| DEC 4258 | TO-92 | | | | |
| DEC 3009184 | TO-92 | | | | |
| DEC FD777 | DO-35 | | | | |
| DEC 662 | DO-35 | | | | |
| DEC NO. | EIA NO. | | | | |

SEMICONDUCTOR CONVERSION CHART

| | | | | |
|---|---|---|---|---|
| DEC 74S.. | 8 | 16 | | |
| IC TYPE | GND | +5V | | |

GND AND 5V ARE USUALLY PIN 7 AND 14 RESPECTIVELY EXCEPTIONS ARE STATED ABOVE

IC PIN LOCATIONS

| ITEM NO. | AWG | FROM PT | TO PT |
|---|---|---|---|

JUMPER LIST

ETCH BOARD REV F

DRN
CHKD
ENGR
APPROVED
MFG
NEXT HIGHER ASSY B-11-8E11B

DIGITAL EQUIPMENT CORPORATION

TITLE: TIMING GENERATOR

SIZE E | NUMBER M309-0-1 | REV S

SCALE | SHEET OF

This drawing and specifications, herein, are the property of Digital Equipment Corporation and shall not be reproduced or copied or used in whole or in part as the basis for the manufacture or sale of items without written permission.

+3VE
74S74 E27
TIGC TPBL
TIGA TI (I) L
SMCA MEM SYNC (B) L
CU2
W6
W5
74S04 E21
CU1
TIGA MEM SYNC H
R152 330Ω +5V
R151 680Ω
TIGA T1 MAT H
FJ1 R153 1K
TIGA T2 MAT H
FT2 R138 1K
TIGA T3 MAT H
CB2 R101 1K
TIGA T4 MAT H
FP1 R148 1K
TIGA T5 MAT H
FR1 R126 1K
TIG TPH MAT H
FU1 R139 1K
+3VA
+3VF
TIGA STOP TI L
PHKA STOP TI L
CT2
R149 330Ω
R150 680Ω
+5V
TMCF SEL MOS L
CC1
TIGA T4 (Ø) H
TIGA T5 (Ø) H
74S65 E13
TIGA UBSDØ1 H
74S11 E3
TMCC ABORT H
CA1
TIGA UBSDØØ H
TIGA UBSDØ1 H
TIGC TPB L
TIGA TI (1) L
TIGA ROM INITA L
TIGC TPB H
UBCA PAUSE H
CK1
UNI DLY 74S74 E8
TMCF FAST L
CB1
TIGA T4 (1) H
74S04 E45
R127 150Ω
TIGA TI SYNC (1) H
TIGA ROM INITA L
INIT SYNC 74S74 E26
TIGC TPB L
+3VK
TIGA TI (1) L
+3VM
R154 150Ω
TIGA T5 (Ø) H
TIGA T2 (Ø) H
TIGA T1A (Ø) H
74S11 E34
TIGA CONT H
TIGA ROM INIT B L
CONT 74S74 E8
TIGA UBSDØØ H
TIGA SNG CY (1) H
TIGA TI (1) H
74S65 E20
TIGA STOP TI L
R141 330Ω
R140 680Ω
T2 (Ø) H
TIGA CONT (1) L
TMCF FAST L
TIGA ROM40 H
74S65 E12
R116 330Ω
R117 680Ω
UBCE ROM INIT H
EJ1
74S40 E14
TIGA ROM INITA L
TIGA ROM INITB L
RA/CTL 74S112 E22
TIGB CONT L
TIGA TI (1) B L
TIGB ROM+ UPB (1) H
TIGC TPB H
R155 150Ω
UBCD EXT BRQ H
RACB UBSDØØ H
TIGM UBSDØ1 L
PHKA STOP T3 L
DH2
R129 330Ω
R134 680Ω
+3VD
74S04 E21
TIGA TI (1) H
74S04 E7
+3VM
74S04 E7
+3VN
TIGA SNGCY (1) H
TIGA T2A (1) H
TIGA CONT (1) L
RACM DIS BUST L
CA1
SSPE ENABLE T3 DLY H
EL2
74S65 E11
TIGA STOP T3 L
TIGA UBSDØ1 L
RACB UBSDØ1 H
CJ1
74S04 E4
TIGA UBSDØ1 H
RACB UBSDØØ H
CL1
TIGA UBSDØØ H
TIGA TI (1) H
TIGC TPB H
TIGA CONT H
SR DLY 74S112 E2
R100 150Ω
+3VN
TIGC TPB L
+3VN
+3VM
UBCA SSYN RESTART H
CP1
74S74 E5
74S74 E6
UBCA INTR RESTART H
CK2
R131 150
+5V
+3VA
TIGA TI (1) H
TIGC TPB H
SDR DLY 74S112 E18
TIGA S0 (1) H
TIGA S1 (1) H
E43
W2
W3
W4
74S11 E47
TIGA S0 (1) H
TIGA S1 (1) H
+3VH
TIGB SINGLE CY L
TIGC TPB H
TIGA CONT H
SNGCY 74S112 E25
+3VF
CM1
74S04 E4
RACB ROM40 BL
TIGA ROM 40 H

TIMING GENERATOR CONTROL — SLOT 15

| FIRST USED ON OPTION/MODEL | QTY. | DESCRIPTION | PART NO. | ITEM NO. |
|---|---|---|---|---|
| 11/45 | | PARTS LIST | | |

UNLESS OTHERWISE SPECIFIED DIMENSION IN INCHES
TOLERANCES
DECIMALS: XXX ± .005, XX ± .02, X ± .1
ANGLES: ± 0° 30'
REMOVE BURRS AND BREAK SHARP CORNERS SURFACE QUALITY

DRW. — DATE 4/25/74
CHK'D. — DATE
ENG. — DATE
PROG. ENG. — DATE 7-10-74
PROD. — DATE

MATERIAL
FINISH
NEXT HIGHER ASSY. B-DD-KB11-C
SCALE
SHEET 2 OF 6

digital EQUIPMENT CORPORATION MAYNARD MASSACHUSETTS

TITLE: TIMING ENERATOR (TIGA)

SIZE D | CODE CS | NUMBER M8109-0-1 | REV. S
DIST.

REVISIONS: REV | CHANGE NO | CHK
DEC FORM NO DRD 102-B

The drawing and specifications, herein, are the property of Digital Equipment Corporation and shall not be reproduced or copied or used in whole or in part as the basis for the manufacture or sale of items without written permission.



SOURCE SYNCHRONIZER

CRYSTAL CLOCK

PHASE SPLITTER/BUFFER

R/C CLOCK (MAINTENANCE)

ROM V UPB CYCLE

| MAINT. SWITCHES: REF. TO XMAA BOARD | | |
|---|---|---|
| S4 | SINGLE TIME STEPPER | |
| S3 | Ø = CRYSTAL TIMING SOURCE<br>1 = RC TIMING SOURCE | |
| S1 | S2 | MODE CONTROL |
| Ø | Ø | NO EFFECT |
| Ø | 1 | SINGLE ROM CYCLE |
| 1 | Ø | UPB STOP |
| 1 | 1 | SINGLE PULSE (USE SWØ) |

TIMING SOURCE CONTROL — SLOT 15

| FIRST USED ON OPTION/MODEL | QTY. | DESCRIPTION | PART NO. | ITEM NO. |
|---|---|---|---|---|
| 11/45 | | PARTS LIST | | |

UNLESS OTHERWISE SPECIFIED DIMENSION IN INCHES. TOLERANCES
DECIMALS: XXX = .005, XX = .02, X = .1 — ANGLES: ±0° 30'
REMOVE BURRS AND BREAK SHARP CORNERS. SURFACE QUALITY ✓

| | | |
|---|---|---|
| DRN. S.W. Roberts | DATE 8/25/71 | digital EQUIPMENT CORPORATION MAYNARD MASSACHUSETTS |
| CHK'D. | DATE | |
| ENG. | DATE 9/26/72 | |
| PROJ. ENG. | DATE 9/26/72 | |
| PROD. | DATE 9/27/72 | |

TITLE: TIMING GENERATOR (TIGB)

| MATERIAL | NEXT HIGHER ASSY. | SIZE | CODE | NUMBER | REV |
|---|---|---|---|---|---|
| -- | B-DD-KB11-Ø | D | CS | M8109-Ø-1 | S |
| FINISH: -- | SCALE: -- | | | | |
| | SHEET 3 OF 6 | DIST. | | | |

REVISIONS: REV | CHANGE NO | CHK

DEC FORM NO. DBD 102-B

This drawing and specifications, herein, are the property of Digital Equipment Corporation and shall not be reproduced or copied or used in whole or in part as the basis for the manufacture or sale of items without written permission



NOTES:
1. ALL NPN TRANSISTORS ARE DEC 3009B, ALL PNP TRANSISTORS ARE DEC 4258, ALL DIODES ARE TYPE FD 777, ALL CAPACITORS ARE .22 uf 50V MONLYTHIC UNLESS OTHERWISE INDICATED.

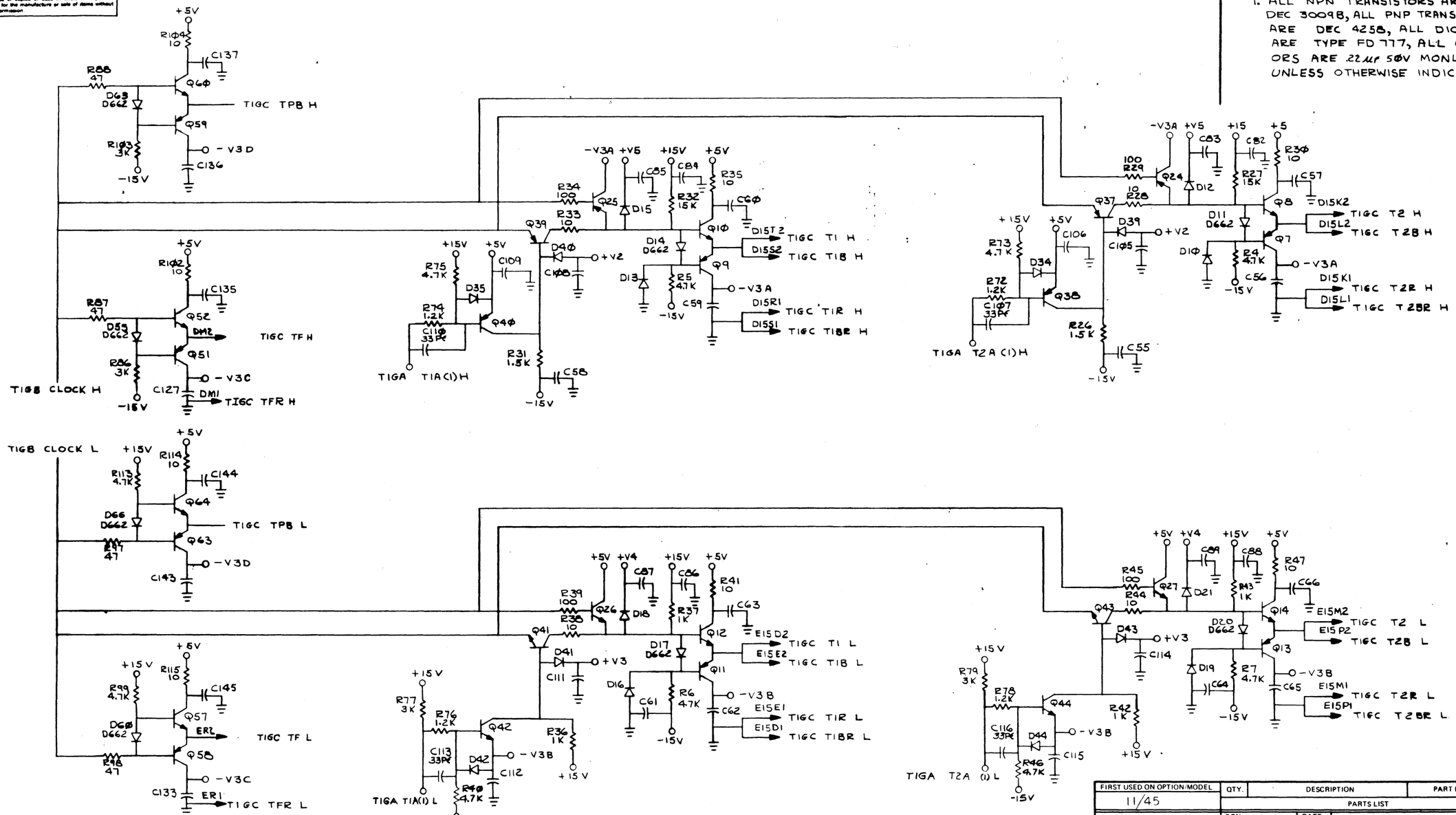


SLOT 15

| FIRST USED ON OPTION/MODEL | QTY. | DESCRIPTION | PART NO. | ITEM NO. |
|---|---|---|---|---|
| 11/45 | | PARTS LIST | | |

UNLESS OTHERWISE SPECIFIED DIMENSION IN INCHES TOLERANCES
DECIMALS: XXX = 005, XX = 02, X = 1; ANGLES: ±0° 30'
REMOVE BURRS AND BREAK SHARP CORNERS SURFACE QUALITY ✓
MATERIAL
FINISH

| | | |
|---|---|---|
| DRN | A. Dennis | DATE 2-25-72 |
| CHK'D | | DATE |
| ENG. | K.V. Oleski | DATE 1/12/72 |
| MFG ENG. | | DATE |
| PROD. | | DATE |
| NEXT HIGHER ASSY. | F DD-KB11-Ø | |
| SCALE | | |
| SHEET 4 OF 6 | | |

digital EQUIPMENT CORPORATION MAYNARD MASSACHUSETTS

TITLE: TIMING GENERATOR (TIGC)

| SIZE | CODE | NUMBER | REV. |
|---|---|---|---|
| D | CS | M8109-Ø-1 | S |

DIST.

| REVISIONS | | |
|---|---|---|
| REV. | CHANGE NO | CHK |

DEC FORM NO DRD 168-B

This drawing and specifications, herein, are the property of Digital Equipment Corporation and shall not be reproduced or copied or used in whole or in part as the basis for the manufacture or sale of items without written permission.

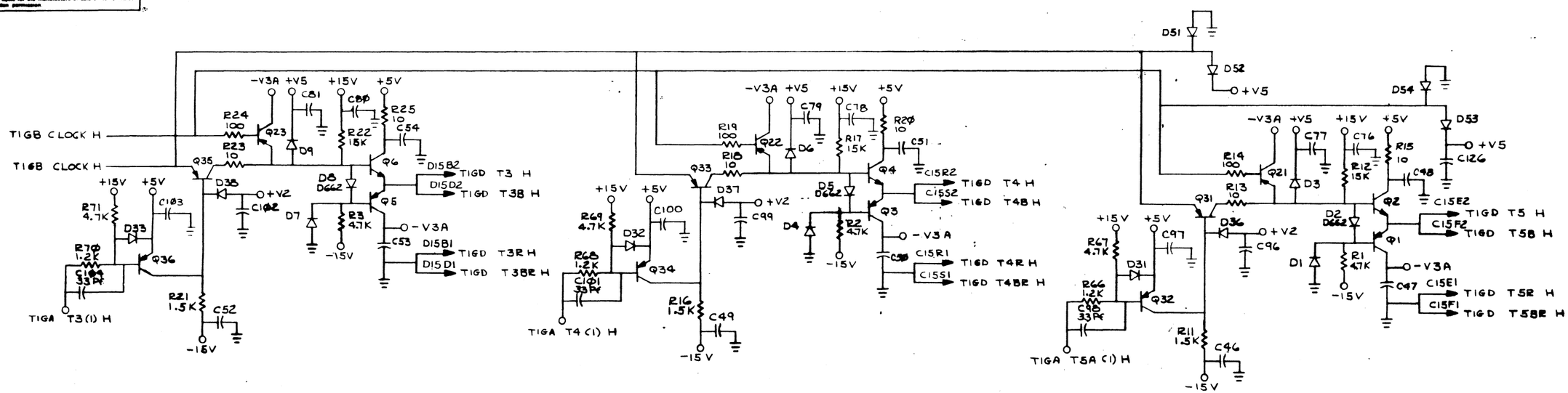


NOTE:
1. ALL NPN TRANSISTORS ARE DEC 300718, ALL PNP TRANSISTORS ARE DEC 4258. ALL DIODES ARE TYPE FD777 ALL CAPACITORS ARE .22 uF MONOLYTHIC UNLESS OTHERWISE INDICATED.

SLOT 15

| FIRST USED ON OPTION/MODEL | QTY. | DESCRIPTION | PART NO. | ITEM NO. |
|---|---|---|---|---|
| 11/45 | | PARTS LIST | | |

UNLESS OTHERWISE SPECIFIED DIMENSION IN INCHES TOLERANCES
DECIMALS: XXX ± .005, XX ± .02, X ± .1 — ANGLES: ±0° 30'
REMOVE BURRS AND BREAK SHARP CORNERS SURFACE QUALITY ✓
MATERIAL
FINISH

| | | |
|---|---|---|
| DRN. K. Davis | DATE 3-1-72 | digital EQUIPMENT CORPORATION MAYNARD MASSACHUSETTS |
| CHK'D. P. Davis | DATE 4/27/72 | TITLE: TIMING GENERATOR (TIGD) |
| ENG. [illegible] | DATE 5/8/72 | |
| MFG. ENG. [illegible] | DATE 4-20-72 | |
| PROD. [illegible] | DATE 4-21-72 | |
| NEXT HIGHER ASSY. B-DD-KB11-Ø | | SIZE D CODE CS NUMBER M8109-Ø-1 REV. S |
| SCALE | | |
| SHEET 5 OF 6 | | DIST. |

REVISIONS: REV | CHANGE NO | CHK
DRAWING 49-523 1969
DEC FORM NO 5960-0-0

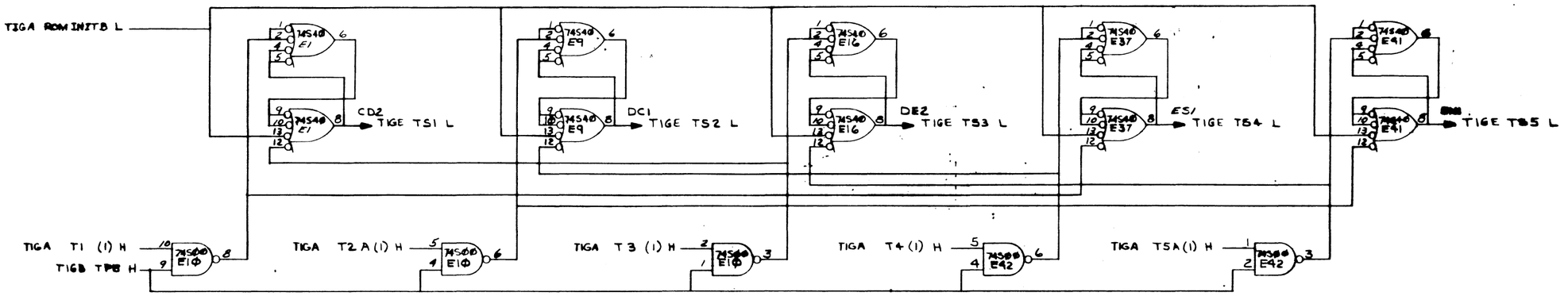


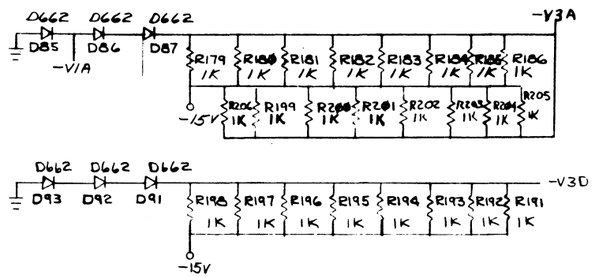


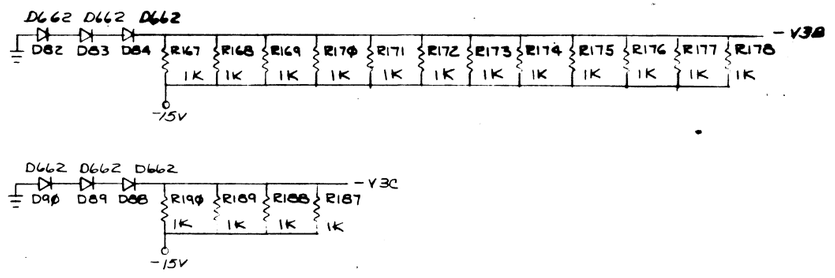








TIMING STATE DRIVERS — SLOT 15

| FIRST USED ON OPTION/MODEL | QTY. | DESCRIPTION | PART NO. | ITEM NO. |
|---|---|---|---|---|
| 11/45 | | PARTS LIST | | |

UNLESS OTHERWISE SPECIFIED DIMENSION IN INCHES TOLERANCES
DECIMALS: XXX ± .005, XX ± .02, X ± .1 — ANGLES: ± 0° 30'
REMOVE BURRS AND BREAK SHARP CORNERS SURFACE QUALITY ✓
MATERIAL —//—
FINISH —//—

DRN L Carberry DATE 8-25-71
CHKD C Sean DATE 9/30/72
ENG K Hart DATE 9/30/72
PROJ ENG D Powell DATE 9-30-72
PROD [illegible] DATE 9-21-72

NEXT HIGHER ASSY. B-DD-KB11-0
SCALE —//—
SHEET 6 OF 6

digital EQUIPMENT CORPORATION MAYNARD MASSACHUSETTS

TITLE: TIMING GENERATOR (TIGE)

SIZE D | CODE CS | NUMBER M8109-0-1 | REV. S | DIST.

REVISIONS: REV. | CHANGE NO | DWN

DEC FORM NO. 5010 405-0